Cetetherm

Cetetherm Pioneer

Heating and domestic hotwater substation for apartments and single family houses

The Cetetherm Pioneer Heat Interface Unit is installation ready for complete central heating and hot water requirements. Pioneer can be connected online for remote control and monitoring.

It is suitable for apartments and single-family houses that are indirect connected to a local heating or district heating network.

Cetetherm has many years of experience in district heating technology, which is put to expert use in Pioneer, with well-thought functionality and focus on easy handling.

BENEFITS

- Connected for remote control and monitoring.
- App for smartphones, where you can control your facility.
- Low return temperature with stable and fast hot water regulation.
- Compact with neat design.
- Valves and pump send their status and current operating data, visible via the room panel.
- Comfortable tapwater control with built in energy optimised idle function.
- Metering connections for individual measuring of energy usage, cold and hot water flow.
- Room panel for space heating, easy to start up and easy to use.

HIGH COMFORT

The Pioneer has a fully automatic individual temperature setting for central heating and hot water. Heat is automatically regulated, depending on outdoor temperature and/or the temperature desired inside the dwelling.

Domestic hot water is heated separately in a high-capacity heat exchanger, ensuring that the hot water is always as fresh as the incoming cold water mains supply.

SIMPLE INSTALLATION

Compact dimensions with well arranged plumbing and factory-complete internal wiring – all make installation very simple. A pre-programmed control unit make things even simpler to allow immediate start-up.

Pioneer is mounted on an insulated frame and includes an insulated cover. Better insulation means less energy usage and higher energy efficiency. In addition, the pipes can be connected up or down depending on the layout of the building.

FUTURE-PROOFED

Pioneer's powerful and unique software is future-proofed throughout Pioneer's lifetime and can be updated remotely or locally as new features and accessories become available.

Pioneer represents the most modern technology, and provides the answer to stringent demands for long term performance. All components are closely matched and carefully tested to function in accordance with 3rd party certified quality assurance system ISO 9001. Pioneer is CE approved and Swedish P-labelled.,-BESA tested and KIWA REG4: certificated.

HEATING NETWORK – A GOOD SOURCE OF HEAT

A community or district heating network is an efficient technology that meets the need for central heating and hot water in a simple, convenient, and secure way. The expansion of district heating to its current level has reduced emission of greenhouse gases from heating by about 20%. The economics of district heating are very competitive compared with other forms of heating.

Pioneer has been designed to meet the future with low temperature district heating.

OPERATION

The Pioneer is used to transfer heat from the primary network to the water in the dwelling's central heating and hot water system.

Heat is transferred through a heat exchanger of acid-resistant, stainless-steel plates, which keep the primary network completely seperated from the dwelling's own system.

The control panel with the indoor sensor is always included and increase the comfort and saves energy.

When no heating flow is required, the heating circulation pump stops automatically, but it will run occasionally. The pump has a built in energy saving function.

When no tap water is used the built-in idle function takes over and keeps the unit ready for production of tap water as well as keeping the return temperature and flow to a minimum.

The use of energy is registered with an external energy meter. Measurement is done by recording the flow of primary network through the system, and by measuring the temperature difference between the medium's supply and return flow.

Cetetherm

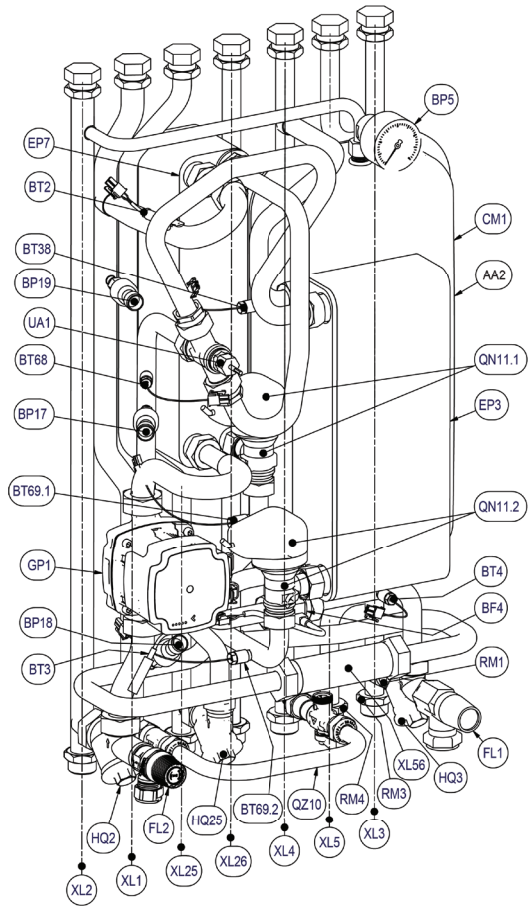

DIAGRAMMATIC FLOW CHART FOR PIONEER

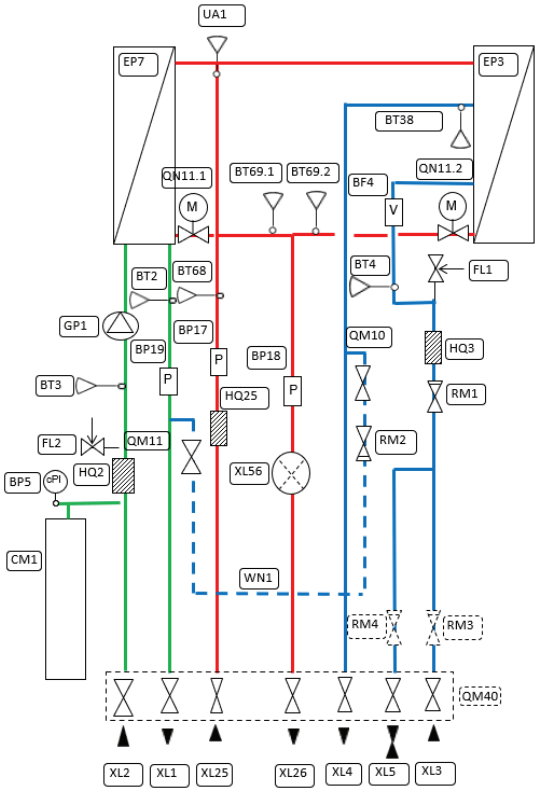

COMPONENTS

Connections

XL1	Heating system, supply
XL2	Heating system, return
XL3	CW
XL4	DHW
XL5	DHWC
XL25	Primary network, supply
XL26	Primary network, return
XL56	Heat meter connection

Sensors

BF4	DHW flow sensor
BP5	Pressure gauge, heating system
BP17	Pressure sensor, Primary network supply
BP18	Pressure sensor, Primary network return
BP19	Pressure sensor, heating system
BT1	Outdoor sensor
BT2	Temperature sensor, heating system flow
BT3	Temperature sensor, heating system return
BT4	CW temperature sensor
BT38	DHW temperature sensor
BT50	Room sensor
BT68	Temperature sensor, Primary network supply
BT69.1	Temperature sensor, Primary network return, RAD
BT69.2	Temperature sensor, Primary network return DHW
UA1	Heat meter sensor connection

Electronic components

AA2	Circuit board, main controller, ASB
AA4	Room control unit RMU, including room sensor
AA31	Communication module, CMO40*

HVAC- components

CM1	Expansion vessel
EP3	Heat exchanger, hot water
EP7	Heat exchanger, heating
FL1	Safety valve DHW
FL2	Safety valve, heating system
GP1	Circulator pump, heating system
HQ2	Strainer heating circuit
HQ3	Strainer, CW
HQ25	Strainer, Primary network supply
QM40	First fix jig with shut-off valves*
QN11.1	Control valve and actuator, heating circuit
QN11.2	Control valve and actuator, tap water circuit
RM1	Check valve for CW
RM3	Check valve for CW, * must be installed when using DHWC
RM4	Check valve for DHWC, * must be installed when using DHWC
QZ10	Filling loop, containing:
	WN1 Filling hose
	QM10 Filling valve, HW
	QM11 Filling valve, heating system
	RM2 Check valve, filling

* option

Cetetherm

OPERATING DATA

	Heating medium	Heating circuit	Hot water circuit
Design pressure, Bar	16	10	10
Design temperature, °C	120	90	90
Opening pressure, safety valve UK, Bar		3	6
Opening pressure, safety valve, (not UK)Bar	-	2,5	10

PERFORMANCE AT DIFFERENTIAL PRESSURE MIN 50 KPA AND MAX 600* KPA

Model	Designed temperature programme (°C)	Capacity (kW)	Primary flow (l/s)	Secondary flow (l/s)
Hot water circuit				
Pi1 2250	65-22/10-50	50	0,28	0,30
Heating circuit				
Pi1 2250	100-63/60-80	14	0,09	0,17
	100-43/40-60	22	0,09	0,26
	100-30/30-35	5,3	0,018	0,25

* Depending on option

CONNECTIONS

Connections	Pioneer	First fix-jig
	External thread	External thread
Primary network supply	G 3/4"	G 1"
Primary network return	G 3/4"	G 1"
Heating system supply	G 3/4"	G 1"
Heating system return	G 3/4"	G 1"
Cold water inlet	G 3/4"	G 1"
Cold water oulet	G 3/4"	G 1"
Hot water	G 3/4"	G 1"

OTHER INFORMATION

Electrical data: 230 V, 1-phase, 50 W
Dimensions (cover): 445 mm width × 256 mm depth, 789 mm height
Dimensions (without cover) 432 mm width × 247 mm depth, 789 mm height
Weight: 35 kg
Transport particulars: Total weight 36 kg, 0,2 m^3
Noise: <55 dB
Differential pressure min 50 kPa and max 600 kPa

AN EASILY MANAGEABLE, ECONOMICAL AND DURABLE SOURCE OF HEAT

Pioneer is a wall-mounted unit and is very compact, quiet with neat design. To minimize transmission of operational sounds, we recommend installing it on well insulated walls or on walls of concrete.

Pioneer requires minimal attendance or maintenance and has a very long operational life.

To save time and efficiency at installation, Cetetherm offers a first-fix-jig including shut-off valves.

CETETHERM MYUPLINK

The Cetetherm myUplink app provides a quick overview of the Pioneer status and of the heating in your home.

This solution makes it easy to follow and control the heat production. A push notification is sent if the Pioneer is affected by operational disturbances.

MyUplink is a fast and efficient tool to easily control your Pioneer, regardless of where you are.

MyUplink is distinct and easy-to-use, for monitoring and control. It also logs the HIU's parameters in a user-friendly history chart.

OPTION

First fix jig with shut-off valves and bypass valve with binder points.

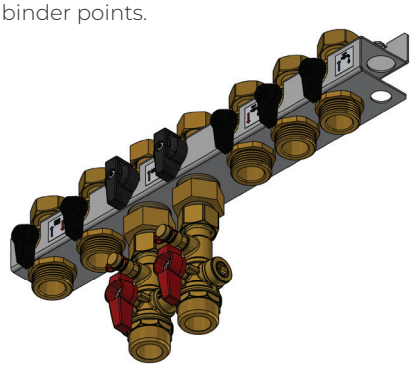

Communication module to connect Pioneer to the Cetetherm myUplink app.

Cetetherm reserves the right to change specifications without prior notification

Cetetherm AB
Logistikvägen 9 – 372 38 Ronneby – Sverige
Tel: +46 457 755 92 info.nordic@cetetherm.com
www.cetetherm.com