Cetetherm

MADE IN SWEDEN MADE IN

Cetetherm Mini ECO

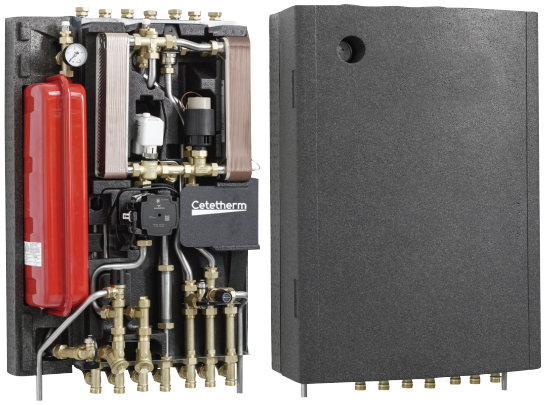

Heating and domestic hotwater substation for apartments and single family houses

The Cetetherm Mini ECO Heat Interface Unit/ district heating substation is installation ready for complete central heating and hot water requirements. It is suitable for apartments and single-family houses that are indirect connected to a local heating or district heating network.

Cetetherm has many years of experience in district heating technology, which is put to expert use in the Mini ECO, resulting in its practical function and ease of use. All components are easily accessible for inspection and future service when required.

HIGH COMFORT

The Mini ECO has a fully automatic individual temperature setting for central heating and hot water. Heat is automatically regulated, depending on outdoor temperature and/or the temperature desired inside the dwelling. Domestic hot water is heated separately in a high-capacity heat exchanger; thus ensuring that the hot water is always as fresh as the incoming cold water mains supply.

SIMPLE INSTALLATION

Compact dimensions, light weight, well arranged plumbing and factory-complete internal wiring – all make installation very simple. A pre-programmed control unit and a power cable already fitted with a plug make things even simpler to allow immediate start-up.

Mini ECO is mounted on an insulated frame and includes an insulated cover. Better insulation means less energy usage and higher energy efficiency. In addition, the pipes can be connected up or down depending on the layout of the building.

LONG-TERM SECURITY

The Micro ECO represents the most modern technology, and provides the answer to stringent demands for long term performance. The heat exchanger plates and all piping are manufactured in acid-resistant stainless steel. All components are closely matched and carefully tested to function in accordance with 3rd party certified quality assurance system ISO 9001. The Mini ECO is CE and P marked.

BENEFITS

- Comfortable tapwater control with built in energy optimised idle function
- Clever insulation
- Metering connections for individual measuring of energy usage, cold and hot water flow
- Easy to install with pipe connection up and down
- Room panel for space heating that is easy to start up and easy to use for the installers and end customers
- Remote monitoring and control via smartphone and PC.

HEATING NETWORK – A GOOD SOURCE OF HEAT

A community or district heating network is an efficient technology that meets the need for central heating and hot water in a simple, convenient and secure way. The expansion of district heating to its current level has reduced emission of greenhouse gases from heating by about 20%. The economics of district heating are very competitive compared with other forms of heating.

OPERATION

The incoming hot medium from the district heating /heating network is at very high pressure and temperature. Therefore only the heat is used; the district/heating network medium does not mix with the water in the dwelling's heating and hot water system.

Heat exchangers are used to transfer heat from the district heating /heating network medium to the water in the dwelling's central heating and hot water system. Heat is transferred through a package of thin acid-resistant, stainless steel plates, which keep the district heating/heating network medium completely separate from the dwelling's own system.

The Mini ECO has automatic temperature control for central heating. The heating circuit is adjusted in relation to the outdoor temperature and the required indoor temperature via a room thermostat/control panel, outdoor sensor and/or indoor sensor. The room thermostat/control panel with the indoor sensor is always included and increase the comfort and saves energy.

When no heating flow is required, the heating circulation pump stops automatically, but is run occasionally to prevent seizing up due to standing still for a long time. The pump has an easy to use interface and built in energy saving functions.

Mini Eco is equipped with the Cetetherm patented, heat exchanger CB20 Integrated Sensor. The CB20 Integrated Sensor has a unique way of controlling tap water. It is designed and optimized for best performance, lowest return temperature and lowest possible life cycle cost. The revolutionary design of the sensor that is a part of the heat exchanger gives the CB20 Integrated Sensor its accurate temperature control. When no tap water is used the built-in idle function takes over and keeps the CB20Integrated Sensor ready for production of tap water as well as keeping the return temperature and flow to a minimum. The self-acting solution makes uses a minimum of energy to operate.

Mini ECO can be offered with a differential pressure controllerthat keeps the differential pressure over the load constant. This secures accurate and stable modulating control, less risk of noise from control valves and easy balancing and commissioning.

The district heating utility company/energy supplier registers use of energy. Measurement is done by recording the flow of district heating /heating network medium through the system, and by measuring the temperature difference between the medium's supply and return flow.

Cetetherm

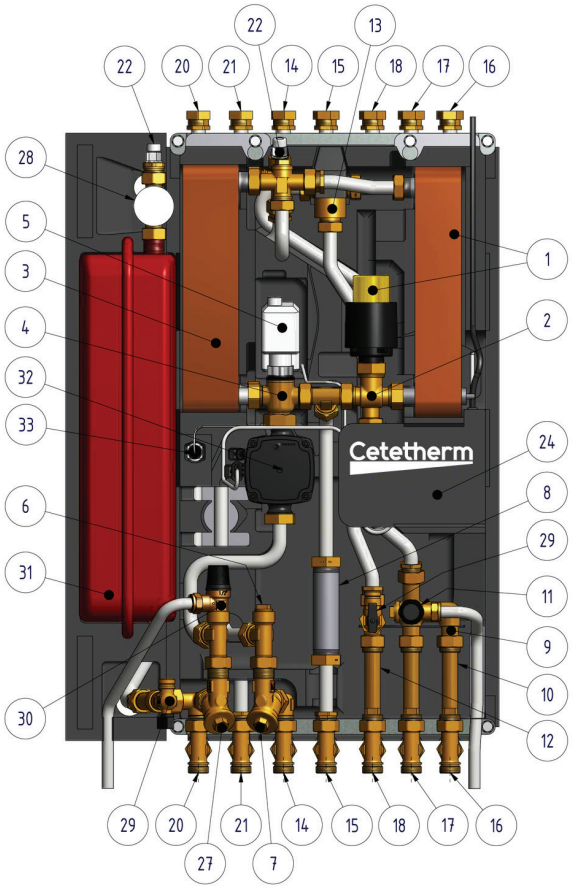

COMPONENTS

1. Heat exchanger and temperature controller for hot water
2. Control valve for hot water
3. Heat exchanger for heating
4. Control valve, heating circuit
5. Actuator, heating circuit
6. Temperature sensor connection, heating media supply
7. Filter for heating media
8. Adapter for energy meter
9. Check valve for cold water
10. Adapter for Cold water flow meter
11. Safety valve for domestic hot water
12. Adapter for Hot water flow meter
13. Safety temperature limiter hot water
14. Heating network media, supply
15. Heating network media, return
16. Cold water (cw)
17. Cold water outlet (cw)
18. Hot water (hw)
20. Heating circuit, return
21. Heating circuit, supply
22. Drain valve
24. Connection box for electric power and sensors, heating circuit
25. Room thermostat/control panel
26. Outdoor temperature sensor (option)
27. Filter heating circuit
28. Pressure gauge for heating circuit
29. Filling loop
30. Safety valve for heating circuit
31. Expansion vessel heating circuit
32. Circulation pump, heating circuit
33. Supply temperature sensor, heating circuit
34. Valve kit with service bypass & binder points (option)

DIAGRAMMATIC FLOW CHART FOR MINI ECO

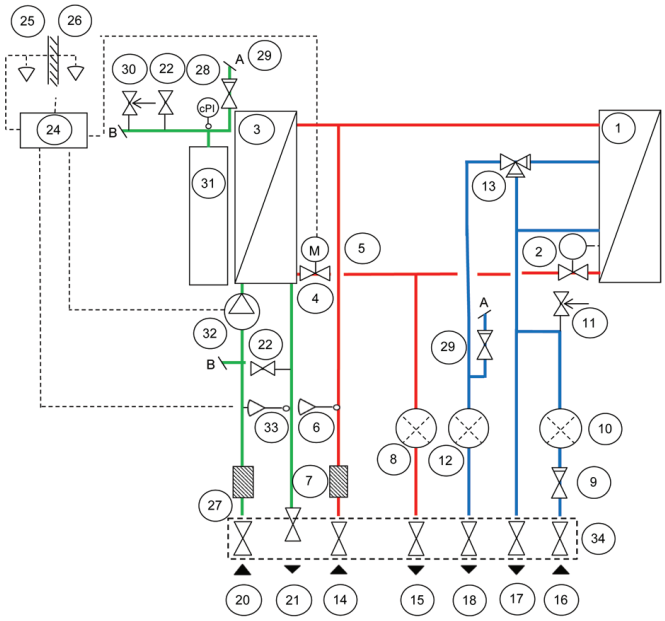

AN EASILY MANAGEABLE, ECONOMICAL AND DURABLE SOURCE OF HEAT

The Mini ECO uses the heating network/ the hot district heating medium for heating the domestic hot water (providing an uninterrupted supply) as well as the water in the central heating system.

The Mini ECO is a wall-mounted unit and is very compact and discreet. To minimize transmission of operational sounds, we recommend installing it on well insulated walls or on walls of concrete.

Mini ECO requires no attendance or maintenance and has a very long operational life. In the event of requiring service or component exchange at some future date, all parts are easily accessible and individually replaceable.

OPERATING DATA

	Heating medium	Heating circuit	Hot water circuit
Design pressure, MPa	1.6	1.0	1.0
Design temperature, °C	120	90	90
Opening pressure, safety valve, MPa	-	0.25	0.9
Volume, l	0.38/0.45	0.46	0.48

PERFORMANCE AT DIFFERENTIAL PRESSURE MIN 50 KPA AND MAX 600* KPA

Designed temperature programme (°C)	Capacity (kW)	Primary flow (l/s)	Actual return temp. (°C)	Secondary flow (l/s)
Hot water circuit				
80-25/10-60	69	0.29	23	0.33
80-25/10-55	75	0.30	21	0.40
65-25/10-50	67	0.38	23	0.40
65-22/10-50	50	0.27	20	0.30
60-25/10-50	50	0.233	24	0.30
Heating circuit				
100-63/60-80	24	0.15	63	0.29
100-43/40-60	27	0.11	42	0.32
100-33/30-35	6.5	0.02	30	0.31
85-47/45-60	19	0.12	47	0.30
80-63/60-70	13	0.17	62	0.31

* Depending on option

OPTION

Valve kit with service bypass & binder points

OTHER INFORMATION

Electrical data: 230 V, 1-phase, 50 W
Dimensions (cover): 560 mm width x 240 mm depth, 850 mm height
Dimensions (without cover): 560 mm width x 220 mm depth, 850 mm height
Weight: 26 kg
Transport particulars: Total weight 32 kg, 0.2 m^3
Noise: <55 dB

Cetetherm reserves the right to change specifications without prior notification

Cetetherm AB
Logistikvägen 9 – 372 38 Ronneby – Sverige
Tel: +46 457 755 92 info.nordic@cetetherm.com
www.cetetherm.com