Cetetherm

MADE IN SWEDEN MADE IN

Cetetherm Mini UK

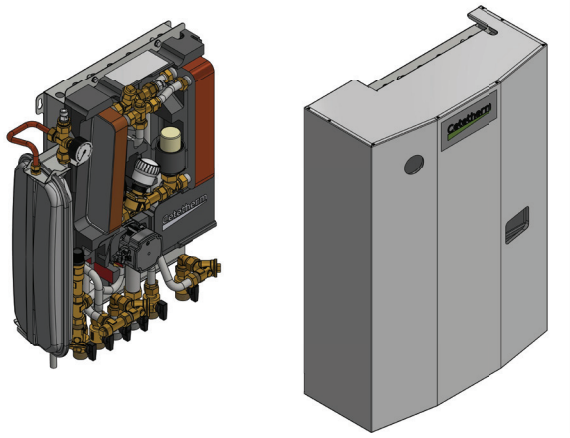

Heating and domestic hotwater HIU for apartments and single family houses

The Cetetherm Mini UK Heat Interface Unit, HIU, is installation ready for complete central heating and hot water requirements. It is suitable for apartments and single-family houses that are indirect connected to a local heating or district heating network.

Cetetherm has many years of experience in district heating technology, which is put to expert use in the Mini UK, resulting in its practical function and ease of use. All components are easily accessible for inspection and future service when required.

HIGH COMFORT

The Mini UK has individual temperature setting for central heating and hot water. Both temperatures are set and controlled manually and maintained at the desired temperature.

The heating circuit is controlled by a temperature control valve. Domestic hot water is heated separately in a high-capacity heat exchanger; thus ensuring that the hot water is always as fresh as the incoming cold water mains supply.

SIMPLE INSTALLATION

Compact dimensions, light weight, well arranged plumbing and factory-complete internal wiring – all make installation very simple.

Mini UK is mounted on an insulated frame and includes an insulated cover. Better insulation means less energy usage and higher energy effciency. In addition, the pipes can be connected up or down depending on the layout of the building.

LONG-TERM SECURITY

The Mini UK represents the most modern technology, and provides the answer to stringent demands for long term performance. The heat exchanger plates and all piping are manufactured in acid-resistant stainless steel. All components are closely matched and carefully tested to function in accordance with quality assurance system ISO 9001:2015.

BENEFITS

- Comfortable tapwater control with built in energy optimised idle function
- Clever insulation
- Easy to install with the possibility of pipe connection up or down.

HEATING NETWORK – A GOOD SOURCE OF HEAT

A community or district heating network is an efficient technology that meets the need for central heating and hot water in a simple, convenient and secure way.

The economics of district heating are very competitive compared with other forms of heating.

OPERATION

The incoming hot medium from the district heating /heating network is at very high pressure and temperature. Therefore only the heat is used; the district/heating network medium does not mix with the water in the dwelling's heating and hot water system.

Heat exchangers are used to transfer heat from the district heating /heating network medium to the water in the dwelling's central heating and hot water system. Heat is transferred through a package of thin acid-resistant, stainless steel plates, which keep the district heating/heating network medium completely separate from the dwelling's own system.

Mini UK is equipped with the Cetetherm patented, heat exchanger CB20 Integrated Sensor. The CB20 Integrated Sensor has a unique way of controlling tap water. It is designed and optimized for best performance, lowest return temperature and lowest possible life cycle cost. The revolutionary design of the sensor that is a part of the heat exchanger gives the CB20 Integrated Sensor its accurate temperature control. When no tap water is used the built-in idle function takes over and keeps the CB20Integrated Sensor ready for production of tap water as well as keeping the return temperature and flow to a minimum. The self-acting solution makes use of a minimum of energy to operate.

The district heating utility company/energy supplier registers use of energy. Measurement is done by recording the flow of district heating /heating network medium through the system, and by measuring the temperature difference between the medium's supply and return flow.

Cetetherm

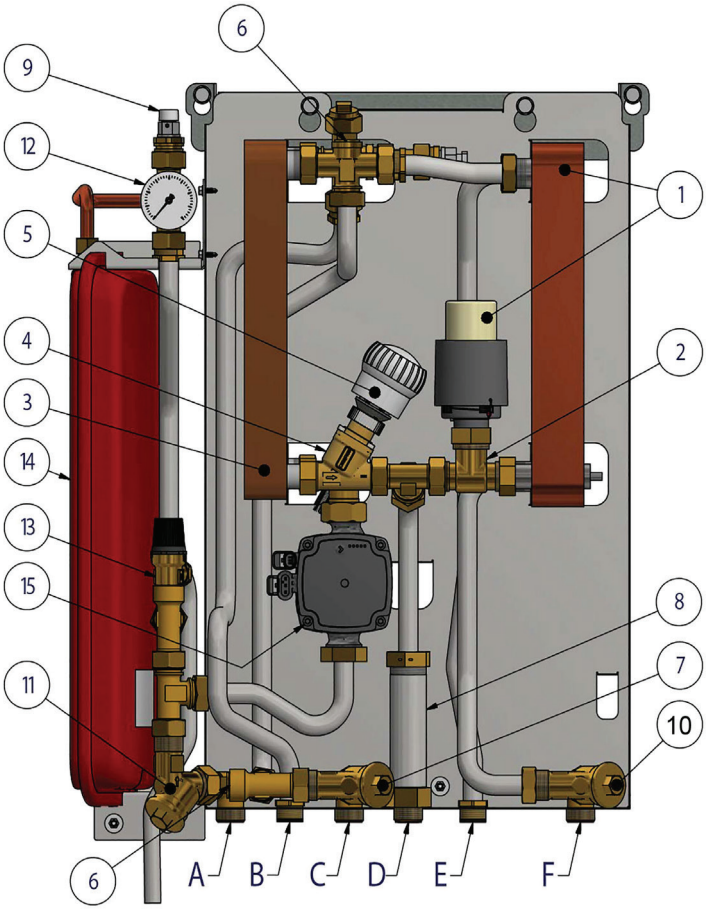

COMPONENTS

1. Heat exchanger and temperature controller for hot water
2. Control valve for hot water
3. Heat exchanger for heating
4. Control valve, heating circuit
5. Manually operated actuator, heating circuit
6. Temperature sensor connection, heating media supply
7. Filter for heating media
8. Adapter for energy meter
9. Air vent valve
10. Filter cold water
11. Filter heating circuit
12. Pressure gauge for heating circuit
13. Safety valve for heating circuit
14. Expansion vessel heating circuit
15. Circulation pump, heating circuit
20. Valve kit with service bypass & binder points (option) *
Filling valve- not mounted at delivery

A. Heating circuit, return
B. Heating circuit, supply
C. Heating network media, supply (primary inlet)
D. Heating network media, return (primary return)
E. Hot water (hw)
F. Cold water (cw)

*) not shown in picture

DIAGRAMMATIC FLOW CHART FOR MINI UK

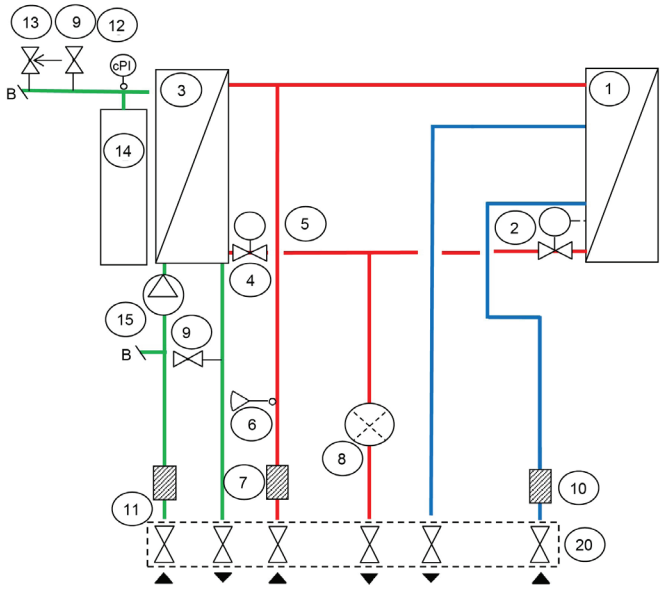

AN EASILY MANAGEABLE, ECONOMICAL AND DURABLE SOURCE OF HEAT

The Mini UK uses the heating network/ the hot district heating medium for heating the domestic hot water (providing an uninterrupted supply) as well as the water in the central heating system.

The Mini UK is a wall-mounted unit and is very compact and discreet. To minimize transmission of operational sounds, we recommend installing it on well insulated walls or on walls of concrete.

Mini UK requires a minimum of attendance and maintenance and has a very long operational life. In the event of requiring service or component exchange at some future date, all parts are easily accessible and individually replaceable.

OTHER INFORMATION

Electrical data: 230 V, 1-phase, 50 W
Dimensions with cover (mm): 560 x 240 x 720 (w x d x h)
Dimensions without cover (mm): 560 x 220 x 720 (w x d x h) The option valve kit can be mounted within the height of 720mm.
Weight: 25 kg
Transport particulars: Total weight 31 kg, volume 0.2 m³
Noise: <55 dB

OPERATING DATA

	Heating medium	Heating circuit	Hot water circuit
Design pressure, MPa	1.6	1.0	1.0
Design temperature, °C	120	90	90
Opening pressure, safety valve, MPa	-	0.3	
Volume, l	0.38/0.45	0.46	0.48

PERFORMANCE AT DIFFERENTIAL PRESSURE MIN 50 KPA AND MAX 600* KPA

Designed temperature programme (°C)	Capacity (kW)	Primary flow (l/s)	Actual return temp. (°C)	Secondary flow (l/s)
Hot water circuit				
80-25/10-60	69	0.29	23	0.33
80-25/10-55	75	0.30	21	0.40
65-25/10-50	67	0.38	23	0.40
65-22/10-50	50	0.27	20	0.30
60-25/10-50	50	0.233	24	0.30
Heating circuit				
100-63/60-80	24	0.15	63	0.29
100-43/40-60	27	0.11	42	0.32
100-33/30-35	6.5	0.02	30	0.31
85-47/45-60	19	0.12	47	0.30
80-63/60-70	13	0.17	62	0.31

* Depending on option

OPTIONS

Valve kit with service bypass & binder points

Pipe connection up

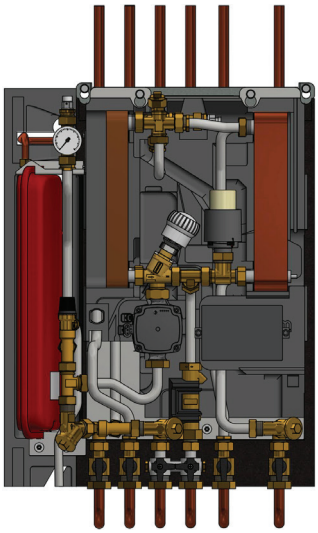

Cetetherm reserves the right to change specifications without prior notification

Cetetherm AB
Logistikvägen 9 – 372 38 Ronneby – Sverige
Tel: +46 457 755 92 info.nordic@cetetherm.com
www.cetetherm.com