Cetetherm

MADE IN FRANCE MADE IN

Cetetherm AquaEfficiency

Best solution for boiler condensation

APPLICATIONS

AquaEfficiency is the most energy efficient tap water system with major innovations and an unique setpoint control, ensuring the lowest return temperature on the primary side. It is designed to provide domestic hot water up to 1200 kW for:

- apartment blocks
- hospitals
- hotels
- retirement and nursing homes
- schools
- leisure centres

KEY BENEFITS

- High primary deltaT heat exchanger with auto-adaptative primary flow rate control for the **best boiler condensation**
- **Robust and reliable** solution with EPDMFF gaskets and primary 3 port mixing valve against scaling
- **Short pay back period** of the overcost compared to other standard ranges due to
  - condensation
  - electrical savings due to controlled Class A pumps
- **Insulated** heat exchanger
- **Sanitary safe** materials and total range in conformity with new pump rules
- **ModBus** RTU RS485 multi-sensors controls: up to 7 sensors

WORKING PRINCIPLE

AquaEfficiency is available in two different models:

- Direct (instantaneous)
- Indirect (semi-instantaneous)

In the tap water system, energy is exchanged through a heat exchanger from the primary to the DHW side. On the primary side, AquaEfficiency has to be fed by a heating source that for example can be a local boiler, a primary tank or a solar system. The temperature of the water entering the heat exchanger on the primary side is adapted to meet the demand on the domestic side. The mixing valve eliminates thermal shock in the heat exchanger and reduces the potential build-up of lime-scale on the secondary side.

On the secondary side, AquaEfficiency Direct is connected to the main water circuit and provides domestic hot water to the distribution pipe-work when there is a demand. A circulation pump, which is used to limit the time needed to deliver domestic hot water with right temperature to the tap, maintains a minimum flow rate through the heat exchanger and through the distribution pipe-work.

For AquaEfficiency Indirect a charging pump maintains, due to a constant flow rate, the supply of energy to the storage tank and the domestic hot water network. The storage tank ensures that domestic hot water supply is met during peak demand periods.

Cetetherm

STANDARD FLOWCHART FOR DIRECT VERSION *

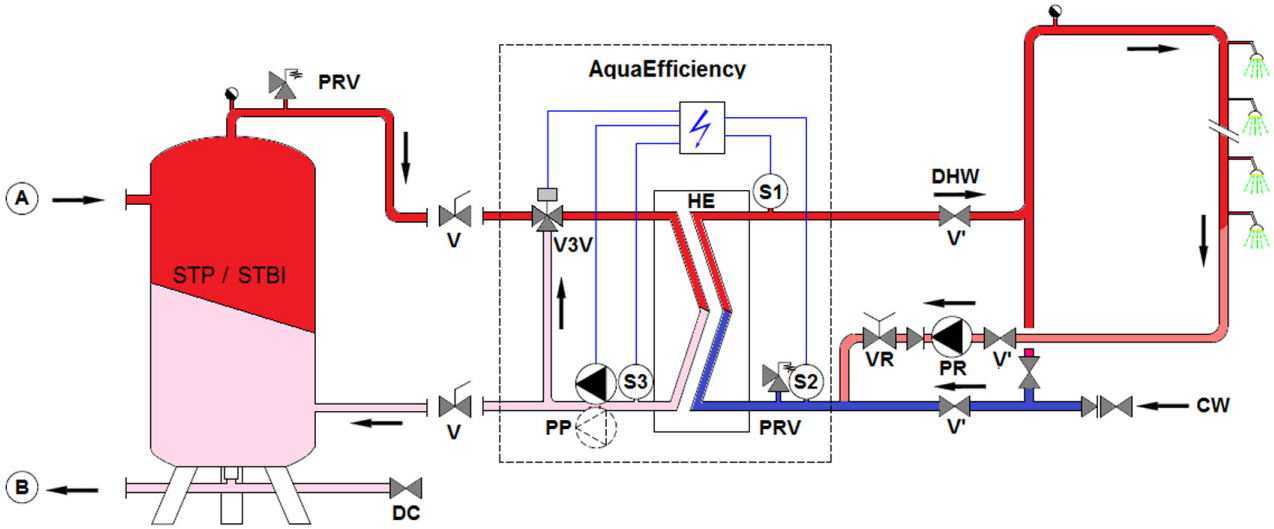

* We do not recommend the use of a mixing bottle on primary side of an AquaEfficiency installation, because the mixing effect destroys the low return temperature. But the need for the differential pressure breaker functionality of this mixing bottle is still mandatory. On AquaEfficiency we recommend to replace the traditionnal mixing bottle by a small buffer tank, named STBI, that serves as an inertial storage tank and avoids any boiler pumping. In case a primary vessel, named STP, is required or designed on the installation, the STBI tanks becomes unnecessary.

STANDARD FLOWCHART FOR INDIRECT VERSION

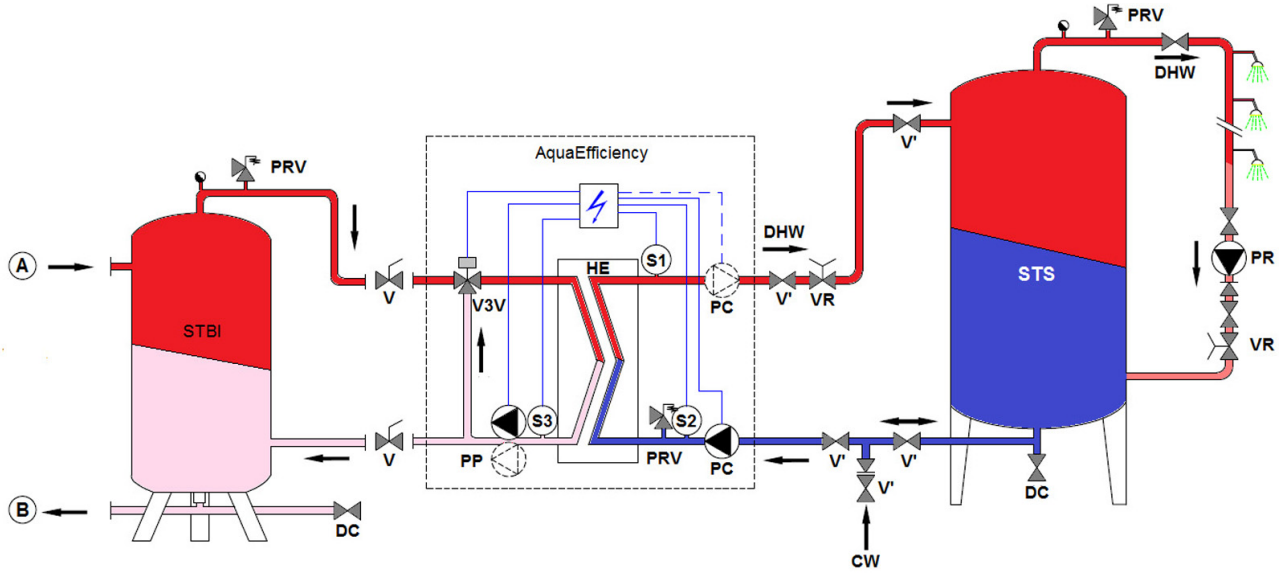

A	Primary inlet
B	Primary outlet
CW	Cold water inlet
DC	Draining valve
DHW	Domestic Hot Water
HE	Heat exchanger
Pt1	Vessel 2 wiring eventual PT1000 sensor
PC	Charging pump (one or two)
PP	Primary pump (single or double)
PR	Recycling pump (on installation)
PRV	Pressure relief valve
S	Temperature sensor
S1, S2, S3	NTC20K Temperature sensors
STBI	Inertial condensation boiler storage tank
STP	Primary storage tank
STS	Secondary storage tank
V, V'	Shut off valve
VR	Balancing valve
V3V	3-port control valve with actuator

Cetetherm

EXAMPLE OF FULL OPTION FLOWCHART WITH OPTIMIZED USE OF PRIMARY VESSEL

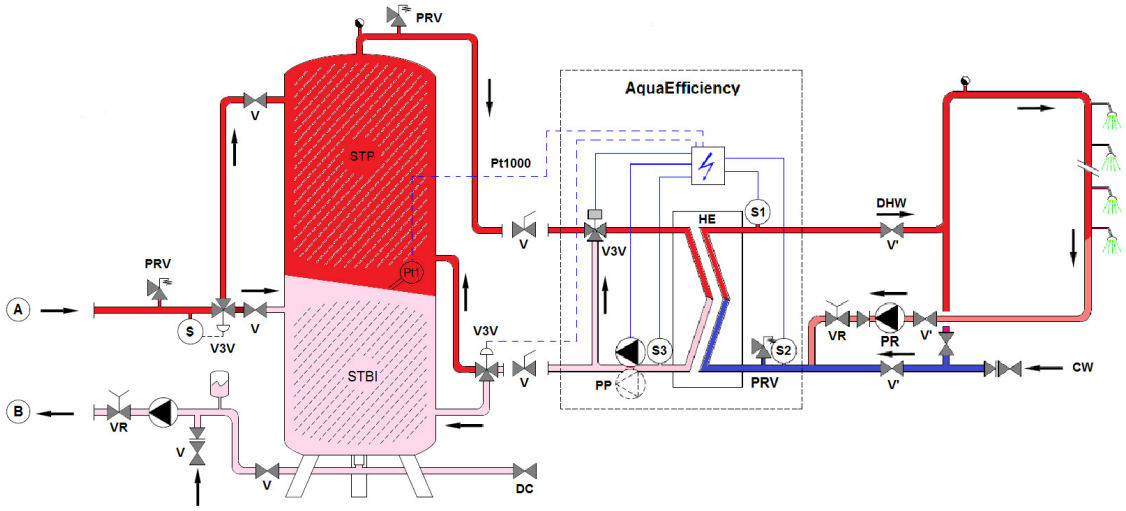

A	Primary inlet	PRV	Pressure relief valve
B	Primary outlet	S	Temperature sensor
CW	Cold water inlet	S1, S2, S3	NTC20K Temperature sensors
DC	Draining valve	STBI	Inertial condensation boiler storage tank
DHW	Domestic Hot Water	STP	Primary storage tank
HE	Heat exchanger	STS	Secondary storage tank
Pt1	Vessel 2 wiring eventual PT1000 sensor	V, V'	Shut off valve
PC	Charging pump (one or two)	VR	Balancing valve
PP	Primary pump (single or double)	V3V	3-port control valve with actuator
PR	Recycling pump (on installation)		

STANDARD FEATURES

Heat exchanger	• **Plates & Gasket heat exchanger** - Corrosion resistant stainless steel 316 plates - EPDMFF Roof top Clip-on gaskets - Rock-wool insulation • **Copper Brazed insulated heat exchanger** • **Cetetherm insulated heat exchanger** - 100% stainless steel fusion bonded heat exchanger
Control system	• 3-port mixing electronic control valve • 24V 0-10V, 15 second speed actuator • Micro3000 ModBus RTU RS485 controller • Dedicated Multi functional IP54 control box • 2 NTC20K temperature sensors on secondary inlet and outlet Control system • 1 NTC20K temperature sensor on primary outlet
Pumps	• **Primary pumps** - Single or double head flooded rotor - Dedicated 0-10V signal for each pump for effective steering/control of primary flow rate • **Secondary pumps** - Single or double stainless steel head flooded rotor - Dedicated 0-10V signal for each pump for effective electrical energy savings
Added facilities	• Easy access to analogic and digital data • Up to 2 control valves signal commands • Up to 4 variable speed pumps signal commands • Up to 7 sensors • 1 Added 230 V AC relay: to activate an eventual draining valve • Volt free contacts in: - 1 Remote contact - 4 Pump ipsothermic contacts reported to the electrical box • Volt free contacts out: - Configurable relays 1 & 2 permitting communication with boilers (eco function, thermal treatment, pump default etc.) - Up to 4 flow switches on/off for pumps

Operating limits	Primary	Secondary
Maximum operating pressure bar g	10	10
Maximum operating temperature °C	100	100

Cetetherm

QUICK SELECTION TABLE – **AQUAEFFICIENCY PLATE & GASKET - DIRECT**

Primary	Prim. 90˚C	Secondary		Prim. 82˚C	Secondary		Prim. 80˚C	Secondary		Prim. 70˚C	Secondary		Prim. 65˚C	Secondary		Partnumber	
flow rate m3/h	cap. kW	flow rate L/sec	pres. drop kPa	cap. kW	flow rate L/sec	pres. drop kPa	cap. kW	flow rate L/sec	pres. drop kPa	cap. kW	flow rate L/sec	pres. drop kPa	cap. kW	flow rate L/sec	pres. drop kPa	single pump	double pump
Secondary: 10 - 55˚C / free pressure available on primary: 5 Kpa																	
3.9	240	1.28	51	220	1.17	43	212	1.14	41	165	0.89	25	120	0.64	25	EFP3013IS	EFP3013ID
4.4	300	1.58	45	275	1.47	38	270	1.44	37	205	1.06	22	170	0.89	22	EFP3017IS	EFP3017ID
5.4	420	2.22	34	350	1.86	24	345	1.83	23	270	1.44	15	225	1.19	15	EFP3027IS	EFP3027ID
8.1	630	3.33	40	525	2.78	28	510	2.69	27	400	2.11	17	335	1.78	12	EFP5037IS	EFP5037ID
12.35	880	4.67	52	780	4.14	42	750	3.97	39	585	3.11	24	485	2.58	17	EFP7045IS	EFP7045ID
13.4	1060	5.64	32	900	4.78	25	870	4.61	23	690	3.67	15	575	3.06	11	EFP7069IS	EFP7069ID
14.9	1200	6.36	24	1030	5.47	18	1000	5.31	17	800	4.25	11	680	3.61	8	EFP9097IS	EFP9097ID
Secondary: 10˚C - 60˚C / free pressure available on primary: 5 Kpa																	
2.6	260	1.25	49	205	0.97	30	200	0.94	29	110	0.53	10	60	0.28	3	EFP3013IS	EFP3013ID
4.2	320	1.53	42	263	1.25	29	260	1.25	28	180	0.86	11	90	0.42	4	EFP3017IS	EFP3017ID
5.6	410	1.97	26	345	1.64	19	335	1.61	18	250	1.19	10	160	0.78	5	EFP3027IS	EFP3027ID
7.8	610	2.92	17	510	2.44	22	500	2.39	21	350	1.67	11	240	1.14	6	EFP5037IS	EFP5037ID
11.8	900	4.31	45	740	3.53	31	720	3.44	29	510	2.44	15	290	1.39	5	EFP7045IS	EFP7045ID
13.7	1015	4.86	25	860	4.11	19	820	3.92	20	640	3.06	11	470	2.25	6	EFP7069IS	EFP7069ID
15.3	1150	5.50	18	990	4.72	14	950	4.53	13	750	3.58	9	580	2.78	5	EFP9097IS	EFP9097ID

QUICK SELECTION TABLE – **AQUAEFFICIENCY COPPER BRAZED - DIRECT**

Primary	Prim. 90˚C	Secondary		Prim. 82˚C	Secondary		Prim. 80˚C	Secondary		Prim. 70˚C	Secondary		Prim. 65˚C	Secondary		Partnumber	
flow rate m3/h	cap. kW	flow rate L/sec	pres. drop kPa	cap. kW	flow rate L/sec	pres. drop kPa	cap. kW	flow rate L/sec	pres. drop kPa	cap. kW	flow rate L/sec	pres. drop kPa	cap. kW	flow rate L/sec	pres. drop kPa	single pump	double pump
Secondary: 10 - 55˚C / free pressure available on primary: 5 Kpa																	
4.1	190	1.00	42	190	1.00	42	190	1.00	42	190	1.00	42	160	0.86	31	EFB6030IS	EFB6030ID
5.25	310	1.64	42	310	1.64	42	310	1.64	42	260	1.39	31	220	1.17	23	EFB6050IS	EFB6050ID
5.7	365	1.94	42	350	1.86	41	350	1.86	41	290	1.53	27	240	1.28	21	EFB6060IS	EFB6060ID
10.6	610	3.25	42	590	3.14	42	580	3.08	41	530	2.81	32	440	2.33	23	EFB11250IS	EFB11250ID
11.5	850	4.50	42	770	4.08	40	760	4.03	39	605	3.22	22	510	2.69	19	EFB11270IS	EFB11270ID
Secondary: 10˚C - 60˚C / free pressure available on primary: 5 Kpa																	
3.5	210	1.00	41	210	1.00	42	220	1.06	40	150	0.72	20	90	0.42	9	EFB6030IS	EFB6030ID
5.3	340	1.61	40	340	1.61	40	330	1.58	37	235	1.11	20	150	0.72	9	EFB6050IS	EFB6050ID
5.8	400	1.92	41	385	1.83	38	370	1.78	35	270	1.28	19	190	0.92	11	EFB6060IS	EFB6060ID
10.8	680	3.25	42	660	3.14	42	650	3.11	39	490	2.33	23	350	1.67	13	EFB11250IS	EFB11250ID
11.9	870	4.17	36	770	3.67	33	750	3.58	27	570	2.72	16	440	2.11	12	EFB11270IS	EFB11270ID

QUICK SELECTION TABLE – **AQUAEFFICIENCY ALFANOVA - DIRECT**

Primary	Prim. 90˚C	Secondary		Prim. 82˚C	Secondary		Prim. 80˚C	Secondary		Prim. 70˚C	Secondary		Prim. 65˚C	Secondary		Partnumber	
flow rate m3/h	cap. kW	flow rate L/sec	pres. drop kPa	cap. kW	flow rate L/sec	pres. drop kPa	cap. kW	flow rate L/sec	pres. drop kPa	cap. kW	flow rate L/sec	pres. drop kPa	cap. kW	flow rate L/sec	pres. drop kPa	single pump	double pump
Secondary: 10 - 55˚C / free pressure available on primary: 5 Kpa																	
3.5	170	0.89	42	170	0.89	42	200	1.06	42	165	0.89	40	135	0.72	27	EFF5230IS	EFF5230ID
4.85	280	1.5	42	280	1.50	42	290	1.53	45	240	1.28	32	195	1.03	21	EFF5250IS	EFF5250ID
5.2	330	1.75	42	330	1.75	42	330	1.75	42	265	1.42	27	220	1.17	19	EFF5260IS	EFF5260ID
10.2	730	3.86	42	650	3.44	34	600	3.19	29	450	2.39	17	360	1.92	11	EFF7650IS	EFF7650ID
11.8	850	4.5	34	740	3.92	26	720	3.83	24	550	2.92	15	450	2.39	10	EFF7670IS	EFF7670ID
Secondary: 10˚C - 60˚C / free pressure available on primary: 5 Kpa																	
3.3	190	0.92	42	190	0.92	42	190	0.92	42	140	0.67	24	80	0.39	8	EFF5230IS	EFF5230ID
4.9	310	1.47	42	300	1.44	39	290	1.39	37	220	1.06	22	155	0.75	11	EFF5250IS	EFF5250ID
5.2	370	1.78	42	330	1.58	34	320	1.53	32	240	1.14	19	180	0.86	11	EFF5260IS	EFF5260ID
7.5	710	3.39	33	610	2.92	24	590	2.81	21	320	1.53	7	190	0.92	3	EFF7650IS	EFF7650ID
10.4	810	3.86	25	700	3.33	20	680	3.25	18	450	2.14	7	270	1.28	3	EFF7670IS	EFF7670ID

Cetetherm

QUICK SELECTION TABLE – **AQUAEFFICIENCY PLATE & GASKET - INDIRECT**

Prim.	Prim. 90˚C	Secondary		Prim. 82˚C	Secondary		Prim. 80˚C	Secondary		Prim. 70˚C	Secondary		Prim. 65˚C	Secondary		Partnumber		
flow rate m3/h	cap. kW	flow rate L/sec	free pres. kPa	cap. kW	flow rate L/sec	free pres. kPa	cap. kW	flow rate L/sec	free pres. kPa	cap. kW	flow rate L/sec	free pres. kPa	cap. kW	flow rate L/sec	free pres. kPa	single/ single pump	double/ single pump	double/ double pump
Secondary: 10 - 55˚C / free pressure available on primary: 5 Kpa																		
3.9	180	0.94	6	220	1.17	5	180	0.94	6	165	0.89	11	120	0.64	27	EFP3013SS	EFP3013DS	EFP3013DD
4.4	220	1.17	5	225	1.19	5	220	1.17	5	205	1.08	10	170	0.89	21	EFP3017SS	EFP3017DS	EFP3017DD
5.4	280	1.50	6	295	1.56	4	290	1.53	5	270	1.44	8	225	1.19	20	EFP3027SS	EFP3027DS	EFP3027DD
6.2	320	1.69	6	325	1.72	5	320	1.69	6	320	1.69	6	320	1.69	6	EFP5037SS	EFP5037DS	EFP5037DD
10.6	520	2.75	6	525	2.78	5	520	2.75	6	520	2.75	6	485	2.58	13	EFP7045SS	EFP7045DS	EFP7045DD
10.9	580	3.08	5	585	3.11	4	580	3.08	5	580	3.08	5	575	3.06	5	EFP7069SS	EFP7069DS	EFP7069DD
10.7	620	3.28	4	620	3.28	4	620	3.28	4	600	3.19	6	620	3.28	4	EFP9097SS	EFP9097DS	EFP9097DD
Secondary: 10˚C - 60˚C / free pressure available on primary: 5 Kpa																		
2.6	200	0.94	5	200	0.94	6	200	0.94	6	110	0.53	33	60	0.28	45	EFP3013SS	EFP3013DS	EFP3013DD
4.2	245	1.17	5	240	1.14	7	240	1.14	7	180	0.86	26	90	0.42	41	EFP3017SS	EFP3017DS	EFP3017DD
5.6	320	1.53	5	310	1.47	7	310	1.47	7	250	1.19	20	160	0.78	34	EFP3027SS	EFP3027DS	EFP3027DD
7.8	360	1.72	5	380	1.81	4	380	1.81	4	350	1.67	7	240	1.14	25	EFP5037SS	EFP5037DS	EFP5037DD
11.8	580	2.78	5	590	2.81	4	590	2.81	4	510	2.44	19	290	1.39	68	EFP7045SS	EFP7045DS	EFP7045DD
13.3	650	3.11	4	630	3.00	6	630	3.00	6	620	2.97	8	470	2.25	35	EFP7069SS	EFP7069DS	EFP7069DD
13.7	680	3.25	4	680	3.25	4	680	3.25	4	680	3.25	4	580	2.78	19	EFP9097SS	EFP9097DS	EFP9097DD

QUICK SELECTION TABLE – **AQUAEFFICIENCY COPPER BRAZED - INDIRECT**

Prim.	Prim. 90˚C	Secondary		Prim. 82˚C	Secondary		Prim. 80˚C	Secondary		Prim. 70˚C	Secondary		Prim. 65˚C	Secondary		Partnumber		
flow rate m3/h	cap. kW	flow rate L/sec	free pres. kPa	cap. kW	flow rate L/sec	free pres. kPa	cap. kW	flow rate L/sec	free pres. kPa	cap. kW	flow rate L/sec	free pres. kPa	cap. kW	flow rate L/sec	free pres. kPa	single/ single pump	double/ single pump	double/ double pump
Secondary: 10 - 55˚C / free pressure available on primary: 5 Kpa																		
3.3	160	0.86	6	160	0.86	6	160	0.86	6	160	0.86	6	160	0.86	6	EFB6030SS	EFB6030DS	EFB6030DD
4.5	230	1.22	5	230	1.22	4	230	1.22	4	230	1.22	4	220	1.17	7	EFB6050SS	EFB6050DS	EFB6050DD
4.8	250	1.33	5	250	1.33	4	250	1.33	4	250	1.33	4	240	1.28	7	EFB6060SS	EFB6060DS	EFB6060DD
9.2	460	2.44	9	460	2.44	4	460	2.44	4	460	2.44	4	440	2.33	15	EFB11250SS	EFB11250DS	EFB11250DD
9.7	520	2.75	8	520	2.75	6	520	2.75	6	520	2.75	6	510	2.69	7	EFB11270SS	EFB11270DS	EFB11270DD
Secondary: 10˚C - 60˚C / free pressure available on primary: 5 Kpa																		
3.5	190	0.92	4	190	0.92	5	190	0.92	5	150	0.72	20	90	0.42	36	EFB6030SS	EFB6030DS	EFB6030DD
5.3	260	1.25	4	260	1.25	6	260	1.25	6	235	1.11	12	150	0.72	31	EFB6050SS	EFB6050DS	EFB6050DD
5.8	280	1.33	5	300	1.44	3	300	1.44	3	270	1.28	9	190	0.92	25	EFB6060SS	EFB6060DS	EFB6060DD
10.8	530	2.53	4	540	2.58	4	540	2.58	4	490	2.33	15	350	1.67	49	EFB11250SS	EFB11250DS	EFB11250DD
11.9	590	2.81	6	600	2.86	5	600	2.86	5	570	2.72	10	440	2.11	33	EFB11270SS	EFB11270DS	EFB11270DD

QUICK SELECTION TABLE – **AQUAEFFICIENCY ALFANOVA - INDIRECT**

Prim.	Prim. 90˚C	Secondary		Prim. 82˚C	Secondary		Prim. 80˚C	Secondary		Prim. 70˚C	Secondary		Prim. 65˚C	Secondary		Partnumber		
flow rate m3/h	cap. kW	flow rate L/sec	free pres. kPa	cap. kW	flow rate L/sec	free pres. kPa	cap. kW	flow rate L/sec	free pres. kPa	cap. kW	flow rate L/sec	free pres. kPa	cap. kW	flow rate L/sec	free pres. kPa	single/ single pump	double/ single pump	double/ double pump
Secondary: 10 - 55˚C / free pressure available on primary: 5 Kpa																		
3.1	150	0.81	5	150	0.81	5	150	0.81	5	150	0.81	5	135	0.72	13	EFF5230SS	EFF5230DS	EFF5230DD
4.2	210	1.11	7	210	1.11	7	215	1.14	6	215	1.14	6	195	1.03	12	EFF5250SS	EFF5250DS	EFF5250DD
4.8	240	1.28	5	240	1.28	5	240	1.28	5	245	1.31	4	220	1.17	11	EFF5260SS	EFF5260DS	EFF5260DD
10.2	450	2.39	7	450	2.39	7	460	2.44	5	450	2.39	7	360	1.92	29	EFF7650SS	EFF7650DS	EFF7650DD
10.6	500	2.67	4	500	2.67	4	500	2.67	4	500	2.67	4	450	2.39	14	EFF7670SS	EFF7670DS	EFF7670DD
Secondary: 10˚C - 60˚C / free pressure available on primary: 5 Kpa																		
3.3	165	0.78	6	165	0.78	6	165	0.78	6	140	0.67	17	80	0.39	38	EFF5230SS	EFF5230DS	EFF5230DD
4.9	240	1.14	5	240	1.14	5	240	1.14	5	220	1.06	11	155	0.75	28	EFF5250SS	EFF5250DS	EFF5250DD
5.2	270	1.28	5	270	1.28	5	270	1.28	5	240	1.14	12	180	0.86	26	EFF5260SS	EFF5260DS	EFF5260DD
7.5	510	2.44	5	520	2.47	4	510	2.44	6	320	1.53	47	190	0.92	75	EFF7650SS	EFF7650DS	EFF7650DD
10.4	550	2.64	4	560	2.67	4	560	2.67	5	450	2.14	26	270	1.28	61	EFF7670SS	EFF7670DS	EFF7670DD

Cetetherm

SELECTION CURVE AQUAEFFICIENCY WITH PRIMARY INLET/OUTLET: 70 - 30°C / DHW INLET/OUTLET: 10 - 60°C

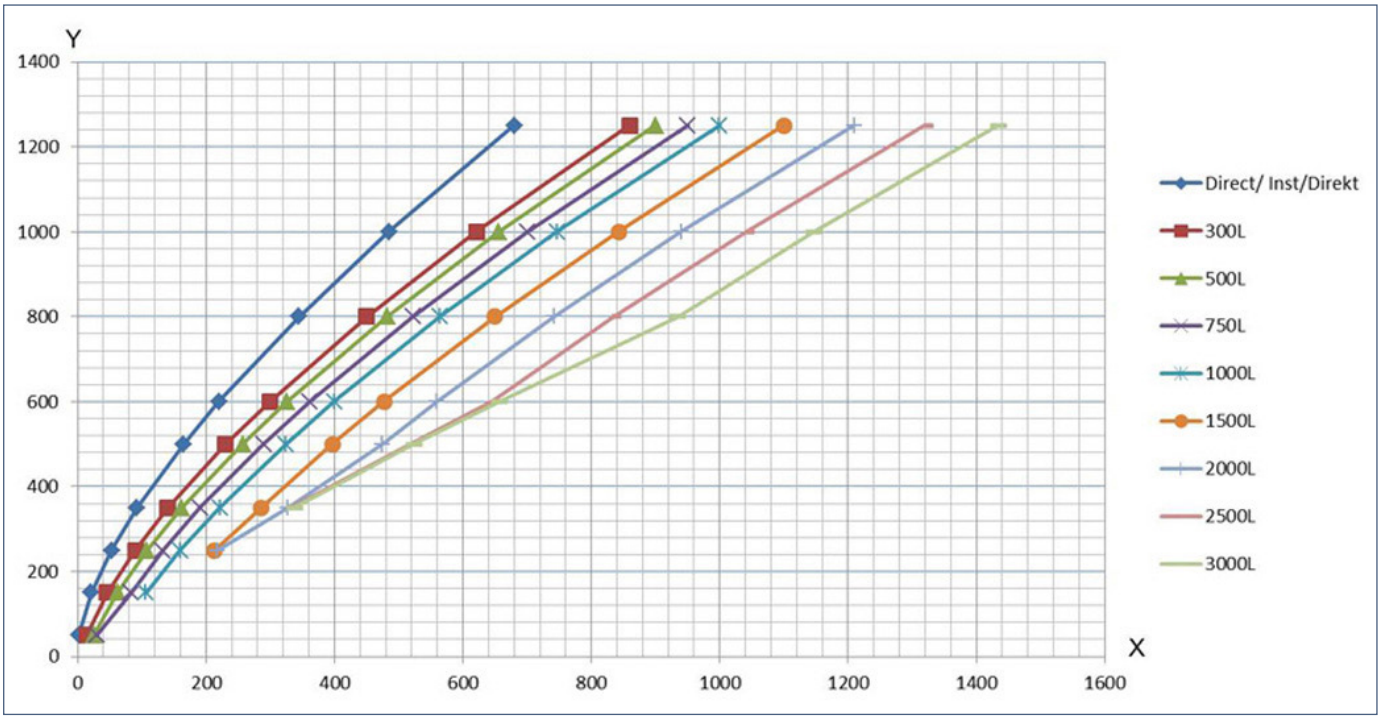

Y Capacity in Kw X Number of 3-4 rooms apartments

SELECTION CURVE PRIMARY VESSEL WITH AQUAEFFICIENCY DHW OUTLET 60°C

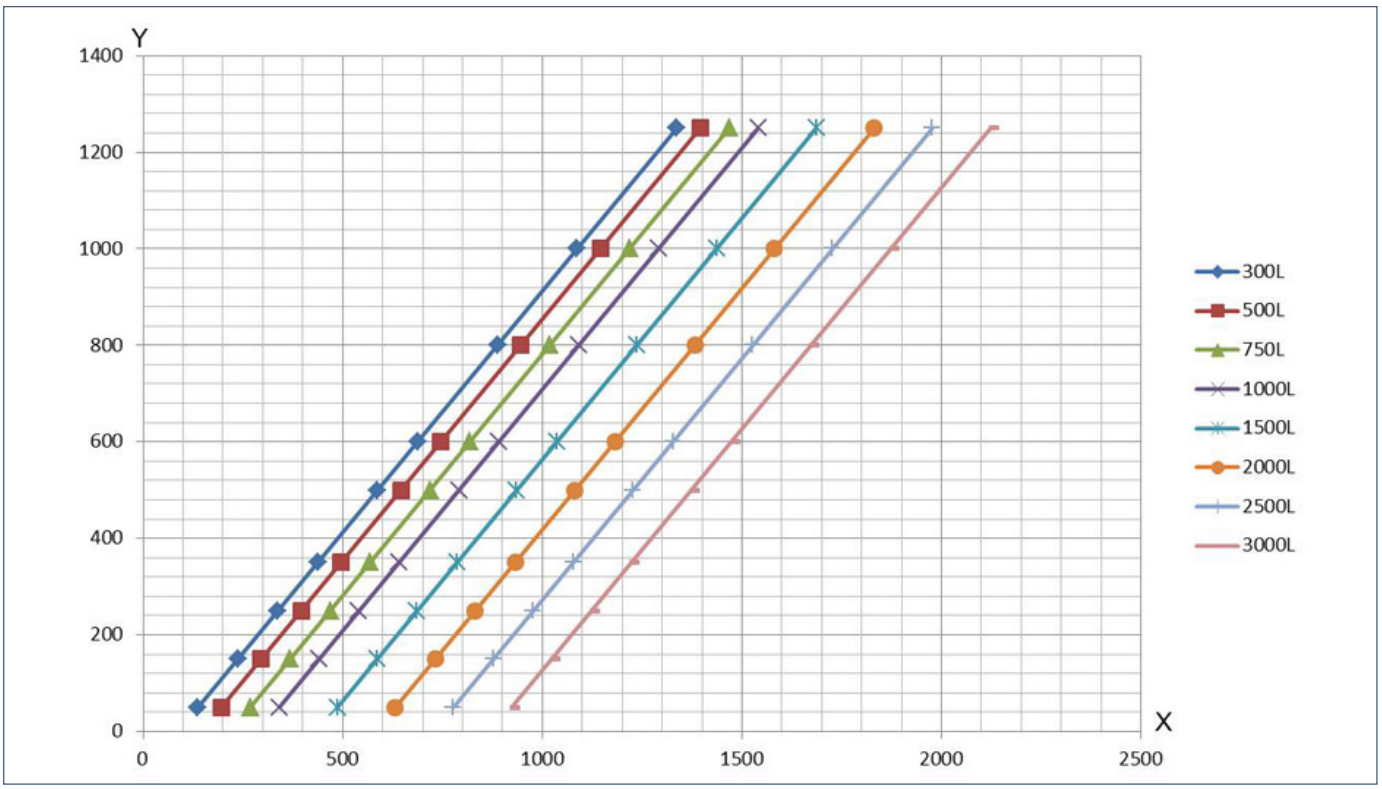

Y Required boiler power in Kw X Required power for Direct domestic hot water unit in Kw

Cetetherm SAS
Route du stade ZI du Moulin - 69490 Pontcharra sur Turdine - France
Tel/ +33 4 74 05 53 50 info.fr@cetetherm.com
www.cetetherm.com