Cetetherm

MADE IN FRANCE MADE IN

Cetetherm AquaEfficiency Neo

+ AquaEfficiency «Neo» for its new Micro4000 control box, with dynamic, user-friendly and intuitive display

+ AquaEfficiency «Neo» for the addition of charging pump(s) management for primary storage tank

+ AquaEfficiency «Neo» for the management of renewable energy installations

+ The best solution for condensing boilers and heat pumps

APPLICATIONS

AquaEfficiency Neo is the most energy-efficient domestic hot water (DHW) system available, equipped with major innovations and a unique patented setpoint control, guaranteeing the lowest possible return temperature on the primary side. It is designed to provide domestic hot water up to 1000 kW in:

- apartment blocks
- Hospitals
- Hotels
- Retirement homes and care centers
- Schools and universities
- Leisure centers...

KEY BENEFITS

- Best boiler condensation thanks to low temperature return and unique, patented primary flow control
- User-friendly control with dynamic menus
- Low scaling
- ery high level of regulation quality thanks to rapid response of control valves; 15 seconds speed actuator
- Low consumption primary and secondary pump(s): class A
- Pre-assembled, pre-mounted, pre-wired – ready to go
- Possibility of remote control via ModBus
- Compliance of materials with drinking water standards: 316 stainless steel plates and EPDM FF “clip-on” gaskets
- Easy and quick maintenance

WORKING PRINCIPLE

In the tap water system, energy is exchanged through a heat exchanger from the primary to the DHW side. On the primary side, AquaEfficiency Neo has to be fed by a heating source that for example can be a local boiler, a primary tank or a solar system. The temperature of the water entering the heat exchanger on the primary side is adapted to meet the demand on the domestic side. The mixing valve eliminates thermal shock in the heat exchanger and reduces the potential build-up of lime-scale on the secondary side.

On the secondary side, AquaEfficiency Neo instantaneous is connected to the main water circuit and provides domestic hot water to the distribution pipe-work when there is a demand. A circulation pump, which is used to limit the time needed to deliver domestic hot water with right temperature to the tap, maintains a minimum flow rate through the heat exchanger and through the distribution pipe-work.

For AquaEfficiency Neo semi-instantaneous a charging pump maintains, due to a constant flow rate, the supply of energy to the storage tank and the domestic hot water network. The storage tank ensures that domestic hot water supply is met during peak demand periods.

AquaEfficiency Neo is available with three different heat exchangers:

1. Plates & gaskets, stainless steel plates
2. Copper Brazed
3. Fusion bonded 100% stainless steel

Cetetherm

MICRO4000

Controller for DHW units AquaFirst Neo, AquaEfficiency Neo and AquaGenius Neo

NEW

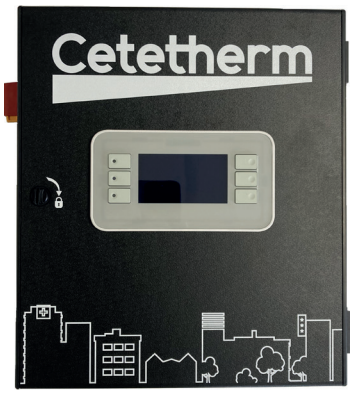

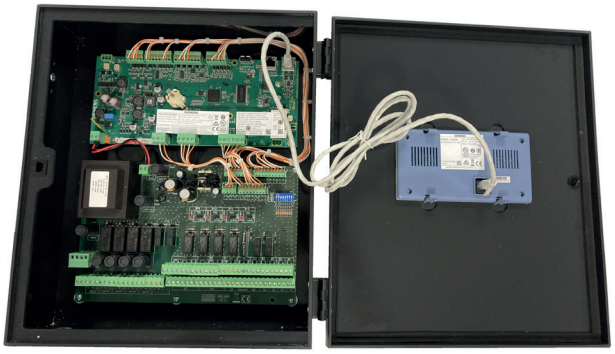

KEY BENEFITS

+ Dynamic, user-friendly and intuitive display
+ Management of charging pump(s) for primary tank
+ Features adapted to renewable energies
+ Heat Pump Ready
+ ModBus communication
+ Siemens Climatix controller with specific Cetetherm program
+ Industrial electronics
+ Easy access to components

CARACTÉRISTIQUES STANDARD

Heat exchanger	• **Plates & Gasket heat exchanger** - Corrosion resistant stainless steel 316 plates - EPDMFF Roof top Clip-on gaskets - Rock-wool insulation • **Copper Brazed insulated heat exchanger** • **Cetetherm insulated heat exchanger** - 100% stainless steel fusion bonded heat exchanger
Control system (patented)	• 3-port mixing electronic control valve • 24V 0-10V, 15 second speed actuator • ModBus RTU RS 485 Controller • Multi functional IP44 control box • 2 NTC10K temperature sensors on secondary input and output • 1 NTC10K temperature sensor on primary output
Pumps	• **Primary pumps** - Single or double head flooded rotor - Dedicated 0-10V signal for each pump for effective steering/control of primary flow rate • **Secondary pumps** - Single or double stainless steel head flooded rotor - Dedicated 0-10V signal for each pump for effective electrical energy savings
Equipments	• Drain valve (primary) • Standard DHW valve 10 bar eff (secondary)

Operating limits	Primary	Secondary
Maximum operating pressure bar	10	10
Maximum operating temperature °C	100	85

Cetetherm

HYDRAULIC FLOWCHART AQUAEFFICIENCY NEO INSTANTANEOUS*

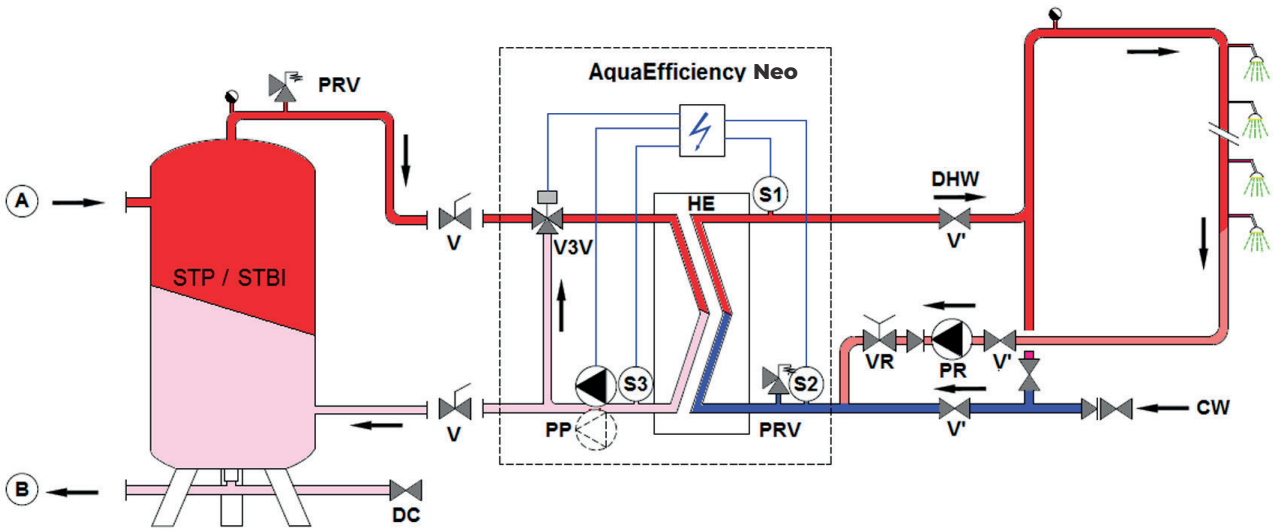

HYDRAULIC FLOWCHART AQUAEFFICIENCY NEO WITH COMBITHERM SOLUTION (SEE NEXT PAGE)

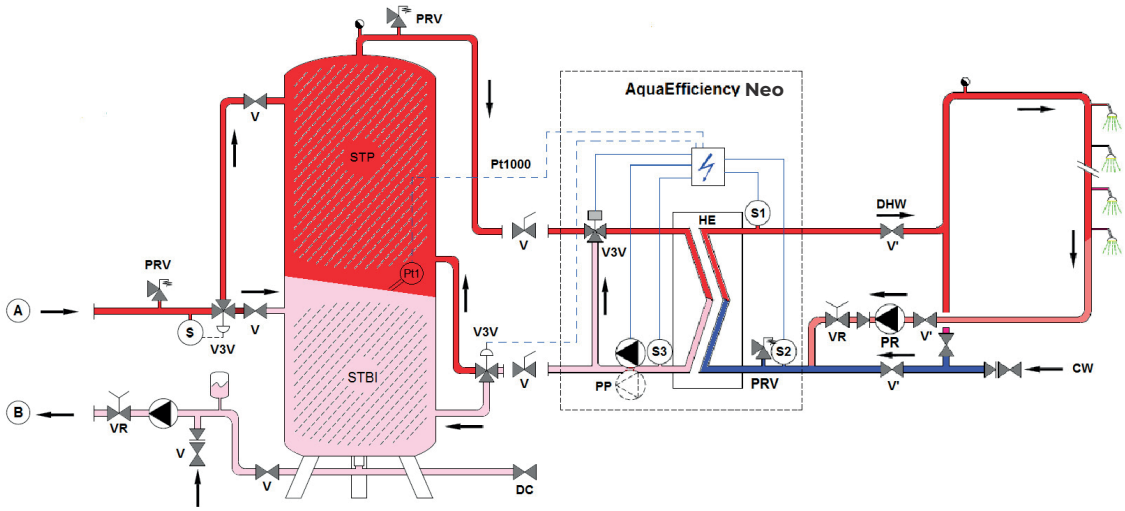

A	Primary inlet
B	Primary outlet
CW	Cold water inlet
DC	Draining valve
DHW	Domestic Hot Water
HE	Heat exchanger
Pt1	Vessel 2 wiring eventual PT1000 sensor
PC	Charging pump (one or two)
PP	Primary pump (single or double)
PRV	Pressure relief valve
S	Temperature sensor
S1, S2, S3	NTC10K Temperature sensors
STBI	Inertial condensation boiler storage tank
STP	Primary storage tank
V, V'	Shut off valve
VR	Balancing valve
V3V	3-port control valve with actuator

* We do not recommend the use of a mixing bottle on primary side of an AquaEfficiency Neo installation, because the mixing effect destroys the low return temperature. But the need for the differential pressure breaker functionality of this mixing bottle is still mandatory. On AquaEfficiency Neo we recommend to replace the traditionnal mixing bottle by a small buffer tank, named STBI, that serves as an inertial storage tank and avoids any boiler pumping. In case a primary vessel, named STP, is required or designed on the installation, the STBI tanks becomes unnecessary.

Cetetherm

COMBITHERM SOLUTION

1.
AquaEfficiency Neo

+

KITASTB:
3-port valve, actuator and sensor

+

Primary tank

+

Recycling pump

2.
AquaFirst Neo*

+

Sensor(s)

+

Primary tank

+

Recycling pump

3.
AquaGenius Neo*

+

Sensor(s)

+

Primary tank

+

Recycling pump

WHY COMBITHERM ?

Combitherm optimises the advantages of both instantaneous and semi-instantaneous, providing

- **Maximum hygiene**
secondary storage is avoided, along with the risk of legionella, as the thermal capacity is transferred to the primary side.

- **Greater cost-effectiveness**
a greater return of investment is generated, by allowing reduced power from the primary source.

- **Full suitability**
the solution is suitable for all domestic hot water loops and high circulation flow rates, like in hospitals and other collective applications..

- **Easy maintenance**
periodic maintenance is not needed at the secondary side, like storage tank and sanitary charging pumps.

- **Optimal reliability and robustness**
the tank charging pump is located on the heating side, so there is no risk of scaling the recycling pump or corrosion.

- **Thermal efficiency**
Combitherm significantly reduces return temperatures.

Contact Cetetherm to calculate the Combitherm solution best suited to your needs.

* Brochures for these products are available at www.cetetherm.com

Cetetherm

QUICK SELECTION TABLE – INSTANTANEOUS – **AQUAEFFICIENCY NEO PLATES & GASKETS**

Primary	Prim. 80°C	Secondary		Prim. 70°C	Secondary		Prim. 65°C	Secondary		Partnumber	
flow rate m3/h	capacity kW	flow rate L/sec	pres. drop kPa	capacity kW	flow rate L/sec	pres. drop kPa	capacity kW	flow rate L/sec	pres. drop kPa	single pump	double pump
Secondary: 10°C - 55°C / free pressure available on primary: 5 Kpa											
3.9	212	1.14	41	165	0.89	25	120	0.64	25	EFP3013IS	EFP3013ID
4.4	270	1.44	37	205	1.06	22	170	0.89	22	EFP3017IS	EFP3017ID
5.4	345	1.83	23	270	1.44	15	225	1.19	15	EFP3027IS	EFP3027ID
8.1	510	2.69	27	400	2.11	17	335	1.78	12	EFP5037IS	EFP5037ID
12.35	750	3.97	39	585	3.11	24	485	2.58	17	EFP7045IS	EFP7045ID
13.4	870	4.61	23	690	3.67	15	575	3.06	11	EFP7069IS	EFP7069ID
14.9	1000	5.31	17	800	4.25	11	680	3.61	8	EFP9097IS	EFP9097ID
Secondary: 10°C - 60°C / free pressure available on primary: 5 Kpa											
2.6	200	0.94	29	110	0.53	10	60	0.28	3	EFP3013IS	EFP3013ID
4.2	260	1.25	28	180	0.86	11	90	0.42	4	EFP3017IS	EFP3017ID
5.6	335	1.61	18	250	1.19	10	160	0.78	5	EFP3027IS	EFP3027ID
7.8	500	2.39	21	350	1.67	11	240	1.14	6	EFP5037IS	EFP5037ID
11.8	720	3.44	29	510	2.44	15	290	1.39	5	EFP7045IS	EFP7045ID
13.7	820	3.92	20	640	3.06	11	470	2.25	6	EFP7069IS	EFP7069ID
15.3	950	4.53	13	750	3.58	9	580	2.78	5	EFP9097IS	EFP9097ID

QUICK SELECTION TABLE – INSTANTANEOUS – **AQUAEFFICIENCY NEO COPPER BRAZED**

Primary	Prim. 80°C	Secondary		Prim. 70°C	Secondary		Prim. 65°C	Secondary		Partnumber	
flow rate m3/h	capacity kW	flow rate L/sec	pres. drop kPa	capacity kW	flow rate L/sec	pres. drop kPa	capacity kW	flow rate L/sec	pres. drop kPa	single pump	double pump
Secondary: 10°C - 55°C / free pressure available on primary: 5 Kpa											
4.1	190	1.00	42	190	1.00	42	160	0.86	31	EFB6030IS	EFB6030ID
5.25	310	1.64	42	260	1.39	31	220	1.17	23	EFB6050IS	EFB6050ID
5.7	350	1.86	41	290	1.53	27	240	1.28	21	EFB6060IS	EFB6060ID
10.6	580	3.08	41	530	2.81	32	440	2.33	23	EFB11250IS	EFB11250ID
11.5	760	4.03	39	605	3.22	22	510	2.69	19	EFB11270IS	EFB11270ID
Secondary: 10°C - 60°C / free pressure available on primary: 5 Kpa											
3.5	220	1.06	40	150	0.72	20	90	0.42	9	EFB6030IS	EFB6030ID
5.3	330	1.58	37	235	1.11	20	150	0.72	9	EFB6050IS	EFB6050ID
5.8	370	1.78	35	270	1.28	19	190	0.92	11	EFB6060IS	EFB6060ID
10.8	650	3.11	39	490	2.33	23	350	1.67	13	EFB11250IS	EFB11250ID
11.9	750	3.58	27	570	2.72	16	440	2.11	12	EFB11270IS	EFB11270ID

QUICK SELECTION TABLE – INSTANTANEOUS – **AQUAEFFICIENCY NEO FUSION BONDED STAINLESS STEEL**

Primary	Prim. 80°C	Secondary		Prim. 70°C	Secondary		Prim. 65°C	Secondary		Partnumber	
flow rate m3/h	capacity kW	flow rate L/sec	pres. drop kPa	capacity kW	flow rate L/sec	pres. drop kPa	capacity kW	flow rate L/sec	pres. drop kPa	single pump	double pump
Secondary: 10°C - 55°C / free pressure available on primary: 5 Kpa											
3.5	200	1.06	42	165	0.89	40	135	0.72	27	EFF5230IS	EFF5230ID
4.85	290	1.53	45	240	1.28	32	195	1.03	21	EFF5250IS	EFF5250ID
5.2	330	1.75	42	265	1.42	27	220	1.17	19	EFF5260IS	EFF5260ID
10.2	600	3.19	29	450	2.39	17	360	1.92	11	EFF7650IS	EFF7650ID
11.8	720	3.83	24	550	2.92	15	450	2.39	10	EFF7670IS	EFF7670ID
Secondary: 10°C - 60°C / free pressure available on primary: 5 Kpa											
3.3	190	0.92	42	140	0.67	24	80	0.39	8	EFF5230IS	EFF5230ID
4.9	290	1.39	37	220	1.06	22	155	0.75	11	EFF5250IS	EFF5250ID
5.2	320	1.53	32	240	1.14	19	180	0.86	11	EFF5260IS	EFF5260ID
7.5	590	2.81	21	320	1.53	7	190	0.92	3	EFF7650IS	EFF7650ID
10.4	680	3.25	18	450	2.14	7	270	1.28	3	EFF7670IS	EFF7670ID

Cetetherm

QUICK SELECTION TABLE – SEMI-INSTANTANEOUS – **AQUAEFFICIENCY NEO PLATES & GASKETS**

Primary	Prim. 80°C	Secondary		Prim. 70°C	Secondary		Prim. 65°C	Secondary		Partnumber		
flow rate m3/h	capacity kW	flow rate L/sec	pres. drop kPa	capacity kW	flow rate L/sec	pres. drop kPa	capacity kW	flow rate L/sec	pres. drop kPa	single/ single pumps	double/ single pumps	double/double pumps
Secondary: 10°C - 55°C / free pressure available on primary: 5 Kpa												
3.9	180	0.94	6	165	0.89	11	120	0.64	27	EFP3013SS	EFP3013DS	EFP3013DD
4.4	220	1.17	5	205	1.08	10	170	0.89	21	EFP3017SS	EFP3017DS	EFP3017DD
5.4	290	1.53	5	270	1.44	8	225	1.19	20	EFP3027SS	EFP3027DS	EFP3027DD
6.2	320	1.69	6	320	1.69	6	320	1.69	6	EFP5037SS	EFP5037DS	EFP5037DD
10.6	520	2.75	6	520	2.75	6	485	2.58	13	EFP7045SS	EFP7045DS	EFP7045DD
10.9	580	3.08	5	580	3.08	5	575	3.06	5	EFP7069SS	EFP7069DS	EFP7069DD
10.7	620	3.28	4	600	3.19	6	620	3.28	4	EFP9097SS	EFP9097DS	EFP9097DD
Secondary: 10°C - 60°C / free pressure available on primary: 5 Kpa												
2.6	200	0.94	6	110	0.53	33	60	0.28	45	EFP3013SS	EFP3013DS	EFP3013DD
4.2	240	1.14	7	180	0.86	26	90	0.42	41	EFP3017SS	EFP3017DS	EFP3017DD
5.6	310	1.47	7	250	1.19	20	160	0.78	34	EFP3027SS	EFP3027DS	EFP3027DD
7.8	380	1.81	4	350	1.67	7	240	1.14	25	EFP5037SS	EFP5037DS	EFP5037DD
11.8	590	2.81	4	510	2.44	19	290	1.39	68	EFP7045SS	EFP7045DS	EFP7045DD
13.3	630	3.00	6	620	2.97	8	470	2.25	35	EFP7069SS	EFP7069DS	EFP7069DD
13.7	680	3.25	4	680	3.25	4	580	2.78	19	EFP9097SS	EFP9097DS	EFP9097DD

QUICK SELECTION TABLE – SEMI-INSTANTANEOUS – **AQUAEFFICIENCY NEO COPPER BRAZED**

Primary	Prim. 80°C	Secondary		Prim. 70°C	Secondary		Prim. 65°C	Secondary		Partnumber		
flow rate m3/h	capacity kW	flow rate L/sec	pres. drop kPa	capacity kW	flow rate L/sec	pres. drop kPa	capacity kW	flow rate L/sec	pres. drop kPa	single/ single pumps	double/ single pumps	double/double pumps
Secondary: 10°C - 55°C / free pressure available on primary: 5 Kpa												
3.3	160	0.86	6	160	0.86	6	160	0.86	6	EFB6030SS	EFB6030DS	EFB6030DD
4.5	230	1.22	4	230	1.22	4	220	1.17	7	EFB6050SS	EFB6050DS	EFB6050DD
4.8	250	1.33	4	250	1.33	4	240	1.28	7	EFB6060SS	EFB6060DS	EFB6060DD
9.2	460	2.44	4	460	2.44	4	440	2.33	15	EFB11250SS	EFB11250DS	EFB11250DD
9.7	520	2.75	6	520	2.75	6	510	2.69	7	EFB11270SS	EFB11270DS	EFB11270DD
Secondary: 10°C - 60°C / free pressure available on primary: 5 Kpa												
3.5	190	0.92	5	150	0.72	20	90	0.42	36	EFB6030SS	EFB6030DS	EFB6030DD
5.3	260	1.25	6	235	1.11	12	150	0.72	31	EFB6050SS	EFB6050DS	EFB6050DD
5.8	300	1.44	3	270	1.28	9	190	0.92	25	EFB6060SS	EFB6060DS	EFB6060DD
10.8	540	2.58	4	490	2.33	15	350	1.67	49	EFB11250SS	EFB11250DS	EFB11250DD
11.9	600	2.86	5	570	2.72	10	440	2.11	33	EFB11270SS	EFB11270DS	EFB11270DD

QUICK SELECTION TABLE – SEMI-INSTANTANEOUS – **AQUAEFFICIENCY NEO FUSION BONDED STAINLESS STEEL**

Primary	Prim. 80°C	Secondary		Prim. 70°C	Secondary		Prim. 65°C	Secondary		Partnumber		
flow rate m3/h	capacity kW	flow rate L/sec	pres. drop kPa	capacity kW	flow rate L/sec	pres. drop kPa	capacity kW	flow rate L/sec	pres. drop kPa	single/ single pumps	double/ single pumps	double/double pumps
Secondary: 10°C - 55°C / free pressure available on primary: 5 Kpa												
3.1	150	0.81	5	150	0.81	5	135	0.72	13	EFF5230SS	EFF5230DS	EFF5230DD
4.2	215	1.14	6	215	1.14	6	195	1.03	12	EFF5250SS	EFF5250DS	EFF5250DD
4.8	240	1.28	5	245	1.31	4	220	1.17	11	EFF5260SS	EFF5260DS	EFF5260DD
10.2	460	2.44	5	450	2.39	7	360	1.92	29	EFF7650SS	EFF7650DS	EFF7650DD
10.6	500	2.67	4	500	2.67	4	450	2.39	14	EFF7670SS	EFF7670DS	EFF7670DD
Secondary: 10°C - 60°C / free pressure available on primary: 5 Kpa												
3.3	165	0.78	6	140	0.67	17	80	0.39	38	EFF5230SS	EFF5230DS	EFF5230DD
4.9	240	1.14	5	220	1.06	11	155	0.75	28	EFF5250SS	EFF5250DS	EFF5250DD
5.2	270	1.28	5	240	1.14	12	180	0.86	26	EFF5260SS	EFF5260DS	EFF5260DD
7.5	510	2.44	6	320	1.53	47	190	0.92	75	EFF7650SS	EFF7650DS	EFF7650DD
10.4	560	2.67	5	450	2.14	26	270	1.28	61	EFF7670SS	EFF7670DS	EFF7670DD

Cetetherm

TECHNICAL TABLES

AQUAEFFICIENCY NEO PLATES & GASKETS

INSTANTANEOUS

Part number	Number of plates	Dimensions	Weight	Power consumption	
		L x D x H (mm)	(kg)	Pmax (W)	Imax (A)
EFP3013IS	13	465 x 785 x 1408	159	193	2.07
EFP3017IS	17		162		
EFP3027IS	27		170		
EFP5037IS	37		178		
EFP7045IS	45		192	455	2.55
EFP7069IS	69		212		
EFP9097IS	97	508 x 961 x 1408	252	455	2.55
EFP3013ID	13	465 x 785 x 1408	169	193	2.07
EFP3017ID	17		173		
EFP3027ID	27		181		
EFP5037ID	37		189		
EFP7045ID	45		210	455	2.55
EFP7069ID	69		230		
EFP9097ID	97	508 x 961 x 1408	270	455	2.55

SEMI-INSTANTANEOUS

Part number	Number of plates	Dimensions	Weight	Power consumption	
		L x D x H (mm)	(kg)	Pmax (W)	Imax (A)
EFP3013SS	13	536 x 785 x 1408	165	267	2.68
EFP3017SS	17		168		
EFP3027SS	27		176		
EFP5037SS	37		184		
EFP7045SS	45		198	635	4.02
EFP7069SS	69		217		
EFP9097SS	97	542 x 961 x 1408	257	635	4.02
EFP3013DS	13	536 x 785 x 1408	175	267	2.68
EFP3017DS	17		178		
EFP3027DS	27		186		
EFP5037DS	37		194		
EFP7045DS	45		216	635	4.02
EFP7069DS	69		235		
EFP9097DS	97	542 x 961 x 1408	275	635	4.02
EFP3013DD	13	536 x 785 x 1408	180	267	2.68
EFP3017DD	17		183		
EFP3027DD	27		191		
EFP5037DD	37		199		
EFP7045DD	45		221	635	4.02
EFP7069DD	69		240		
EFP9097DD	97	542 x 961 x 1408	281	635	4.02

Cetetherm

AQUAEFFICIENCY NEO COPPER BRAZED

INSTANTANEOUS

Part number	Number of plates	Dimensions	Weight	Power consumption	
		L x D x H (mm)	(kg)	Pmax (W)	Imax (A)
EFB6030IS	30	409 x 558 x 1225	64	159	1.8
EFB6050IS	50		66		
EFB6060IS	60		67		
EFB11250IS	50	582 x 859 x 1287	98	376	2.21
EFB11270IS	70		106		
EFB6030ID	30	409 x 558 x 1225	72	159	1.8
EFB6050ID	50		74		
EFB6060ID	60		75		
EFB11250ID	50	582 x 859 x 1287	116	376	2.21
EFB11270ID	70		124		

SEMI-INSTANTANEOUS

Part number	Number of plates	Dimensions	Weight	Power consumption	
		L x D x H (mm)	(kg)	Pmax (W)	Imax (A)
EFB6030SS	30	521 x 558 x 1225	69	233	2.41
EFB6050SS	50		72		
EFB6060SS	60		73		
EFB11250SS	50	583 x 859 x 1287	104	556	3.68
EFB11270SS	70		112		
EFB6030DS	30	521 x 558 x 1225	77	233	2.41
EFB6050DS	50		80		
EFB6060DS	60		81		
EFB11250DS	50	583 x 859 x 1287	122	556	3.68
EFB11270DS	70		130		
EFB6030DD	30	521 x 558 x 1225	82	233	2.41
EFB6050DD	50		85		
EFB6060DD	60		86		
EFB11250DD	50	583 x 859 x 1287	127	556	3.68
EFB11270DD	70		135		

AQUAEFFICIENCY NEO FUSION BONDED STAINLESS STEEL

INSTANTANEOUS

Part number	Number of plates	Dimensions	Weight	Power consumption	
		L x D x H (mm)	(kg)	Pmax (W)	Imax (A)
EFF5230IS	30	409 x 558 x 1225	64	159	1.8
EFF5250IS	50		66		
EFF5260IS	60		67		
EFF7650IS	50	500 x 859 x 1287	98	376	2.21
EFF7670IS	70		106		
EFF5230ID	30	409 x 558 x 1225	72	159	1.8
EFF5250ID	50		74		
EFF5260ID	60		75		
EFF7650ID	50	500 x 859 x 1287	116	376	2.21
EFF7670ID	70		124		

SEMI-INSTANTANEOUS

Part number	Number of plates	Dimensions	Weight	Power consumption	
		L x D x H (mm)	(kg)	Pmax (W)	Imax (A)
EFF5230SS	30	521 x 558 x 1225	69	233	2.41
EFF5250SS	50		72		
EFF5260SS	60		73		
EFF7650SS	50	582 x 859 x 1287	104	556	3.68
EFF7670SS	70		112		
EFF5230DS	30	521 x 558 x 1225	77	233	2.41
EFF5250DS	50		80		
EFF5260DS	60		81		
EFF7650DS	50	582 x 859 x 1287	122	556	3.68
EFF7670DS	70		130		
EFF5230DD	30	521 x 558 x 1225	82	233	2.41
EFF5250DD	50		85		
EFF5260DD	60		86		
EFF7650DD	50	582 x 859 x 1287	127	556	3.68
EFF7670DD	70		135		

Cetetherm

SELECTION CHART AQUAEFFICIENCY NEO WITH INLET/OUTLET PRIMARY : 70 - 30 °C / INLET/OUTLET DHW : 10 À 60 °C

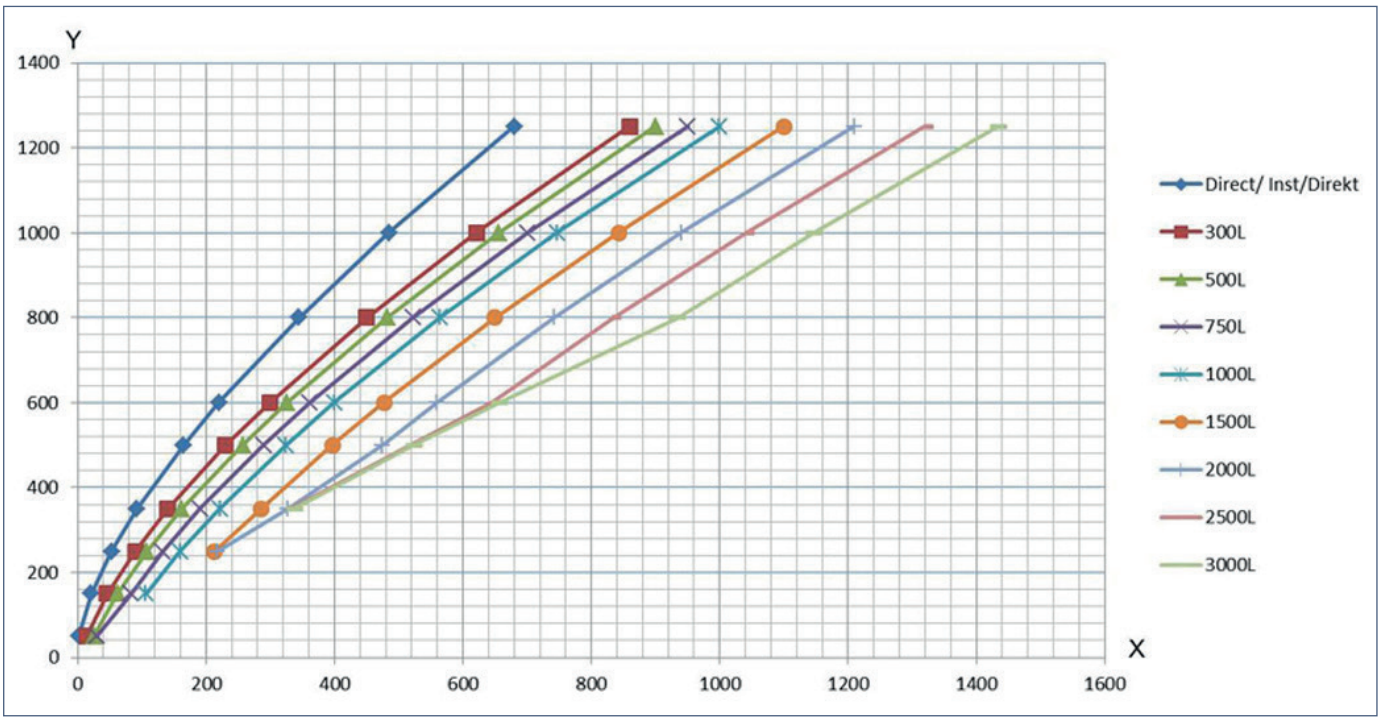

Y Capacity in Kw X Number of 3-4 rooms apartments or Liters/ second

SELECTION CHART AQUAEFFICIENCY NEO COMBINED WITH PRIMARY STORAGE TANK / OUTLET DHW 60°C

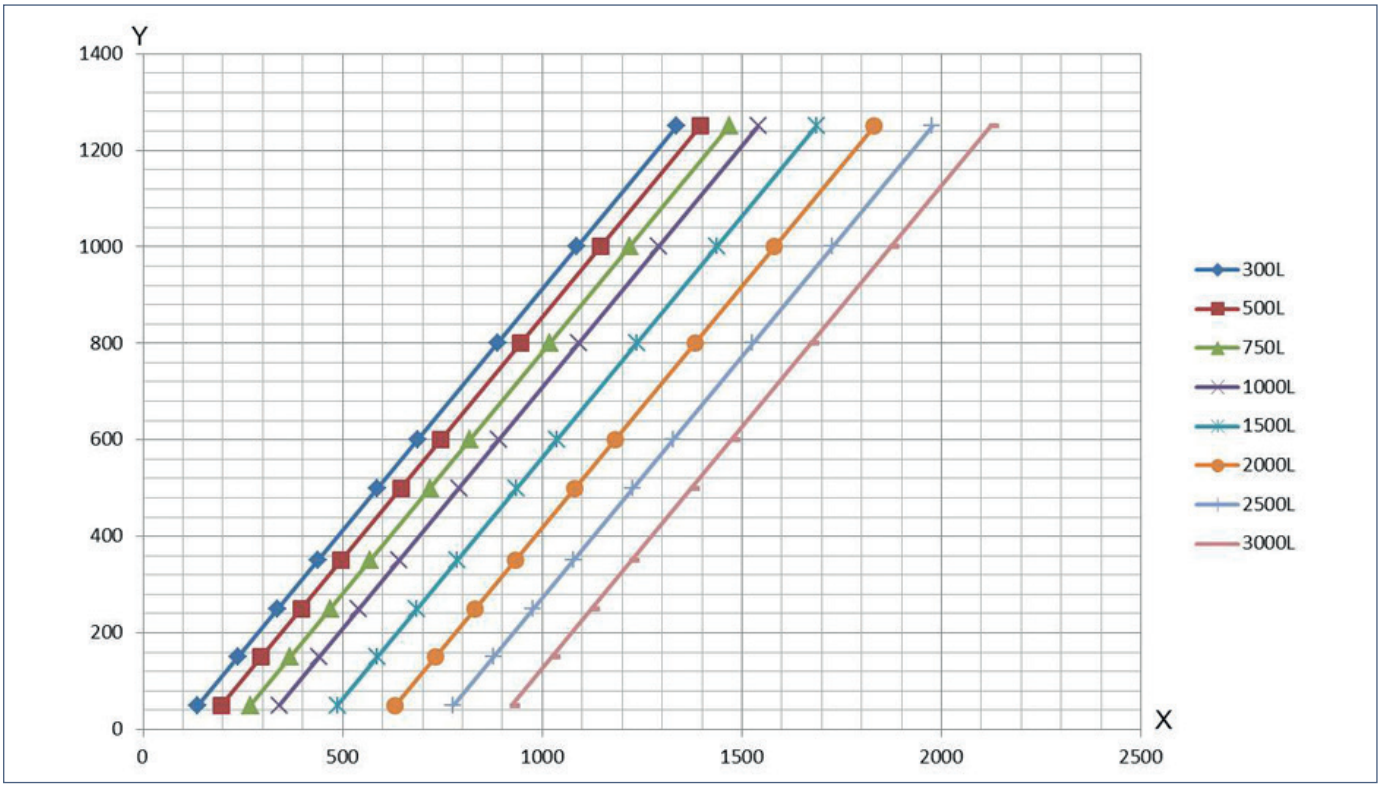

Y Required boiler power in Kw X Required power for instantaneous domestic hot water unit in Kw

Cetetherm

AQUAEFFICIENCY NEO
PLATES & GASKETS

- MODEL 3000
  INSTANTANEOUS
  DOUBLE

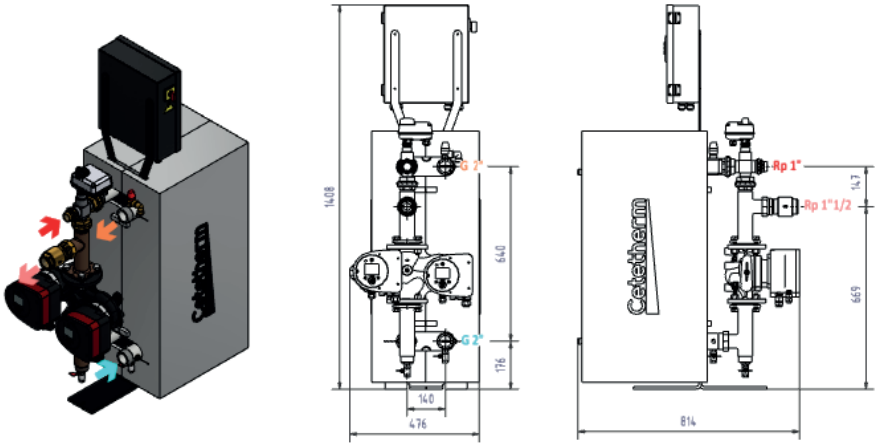

- MODELS 5000 & 7000
  INSTANTANEOUS
  DOUBLE

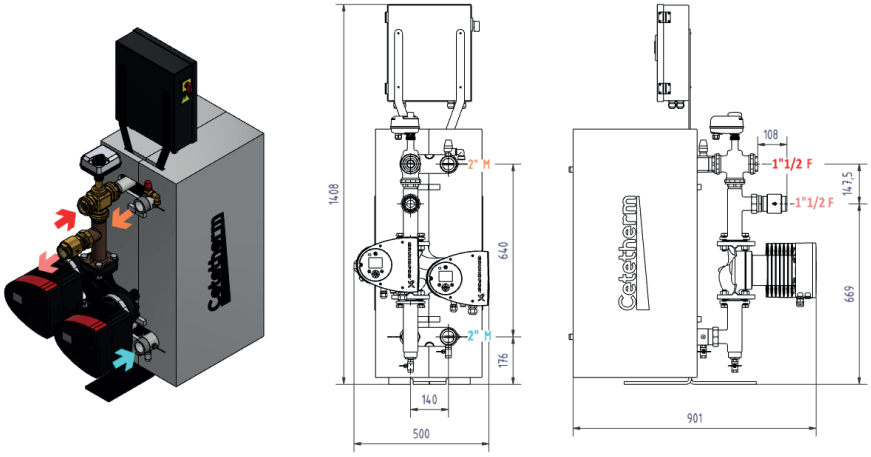

- MODEL 9000
  INSTANTANEOUS
  DOUBLE

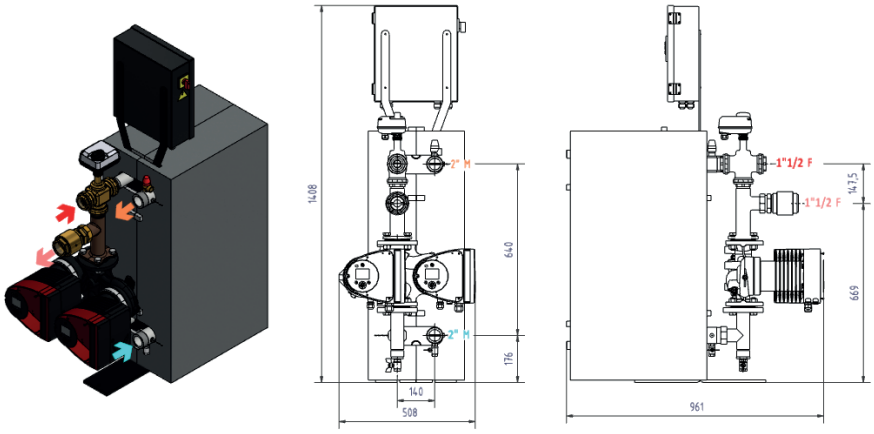

- MODEL 3000
  SEMI-INSTANTANEOUS
  DOUBLE

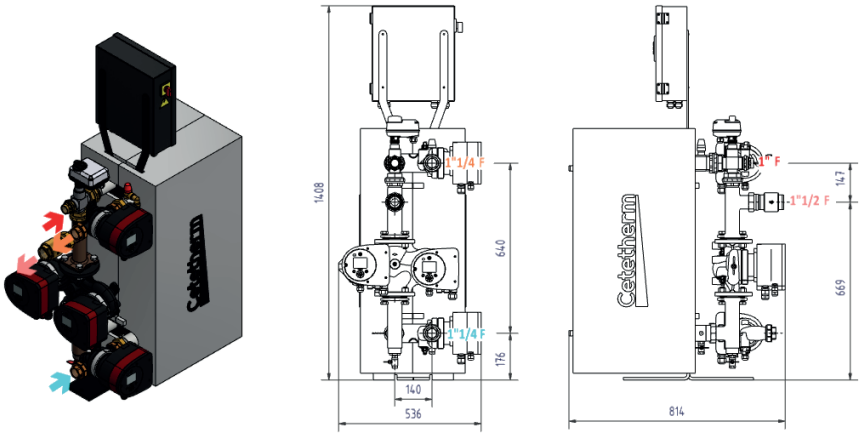

Cetetherm

AQUAEFFICIENCY NEO
PLATES & GASKETS

- MODELS 5000 & 7000
  SEMI-INSTANTANEOUS
  DOUBLE

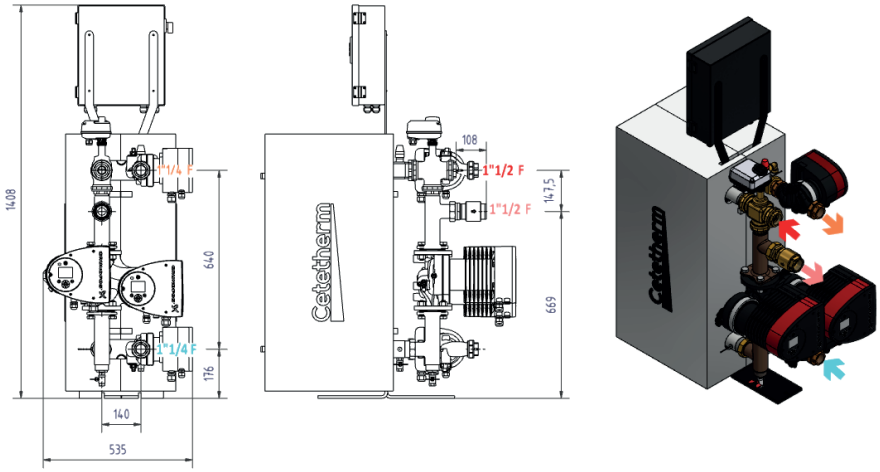

- MODEL 9000
  SEMI-INSTANTANEOUS
  DOUBLE

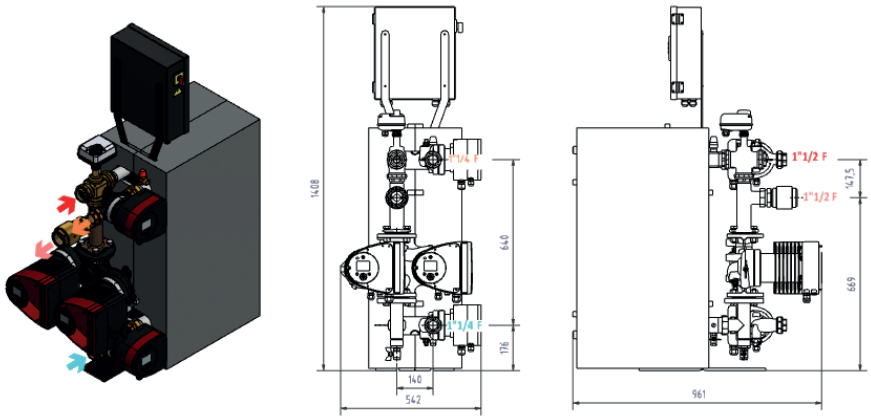

AQUAEFFICIENCY NEO
COPPER BRAZED & FUSION BONDED

- MODELS CB60/F52
  INSTANTANEOUS
  DOUBLE

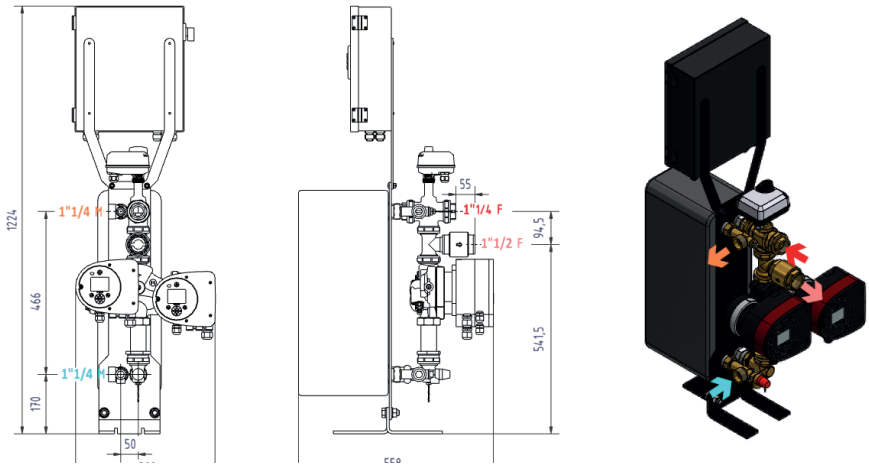

- MODELS CB112/F76
  INSTANTANEOUS
  DOUBLE

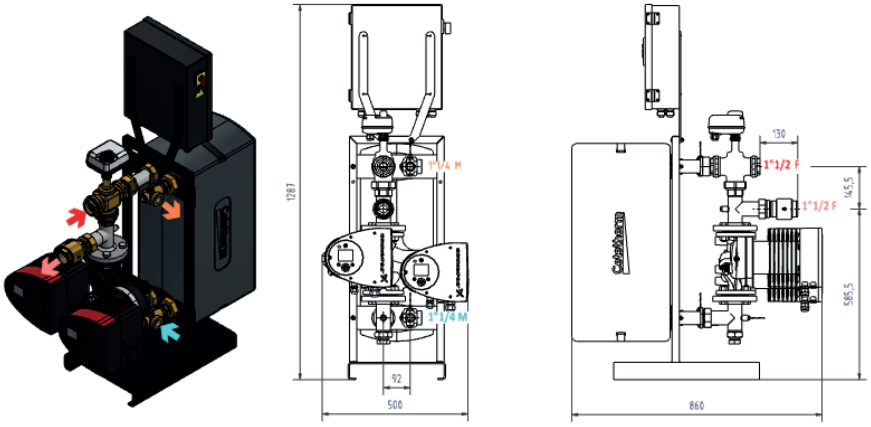

AQUAEFFICIENCY NEO
COPPER BRAZED & FUSION BONDED

- MODELS CB60/F52
  SEMI-INSTANTANEOUS
  DOUBLE

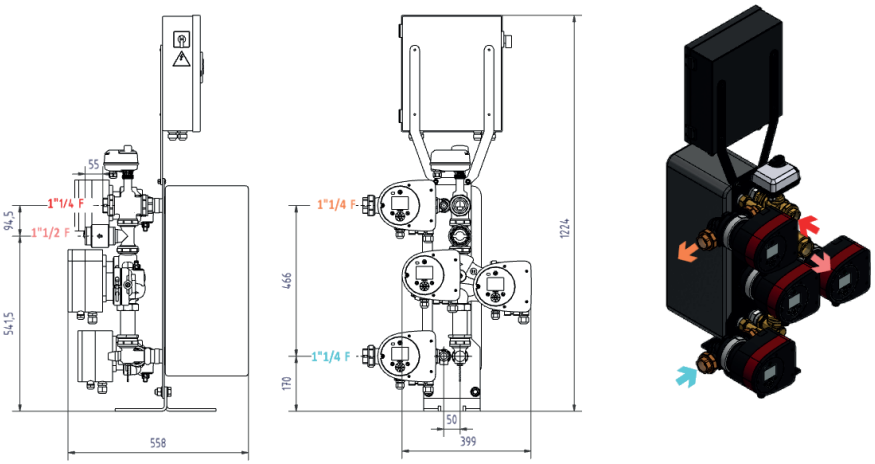

- MODELS CB112/F76
  SEMI-INSTANTANEOUS
  DOUBLE

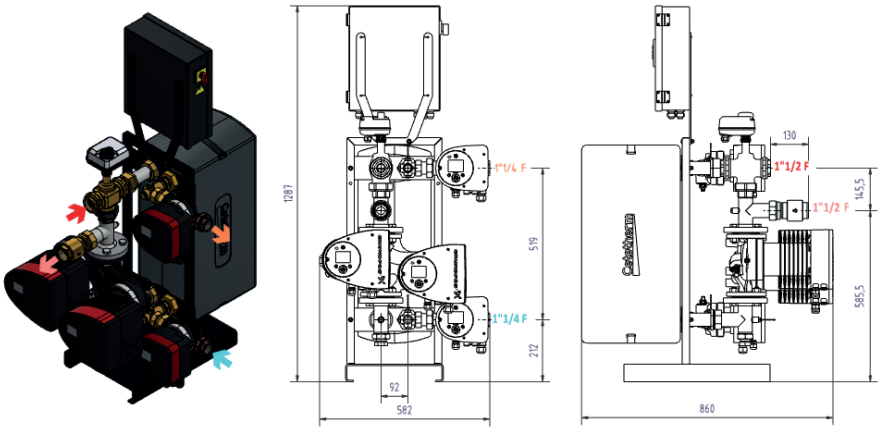

Cetetherm SAS
Route du stade ZI du Moulin - 69490 Pontcharra sur Turdine - France
Tel: +33 4 74 05 53 50 info.fr@cetetherm.com
www.cetetherm.com