Cetetherm

Installation, service and operating instruction Cetetherm Mini ECO

Heating & domestic hot water substation for apartments and single family houses

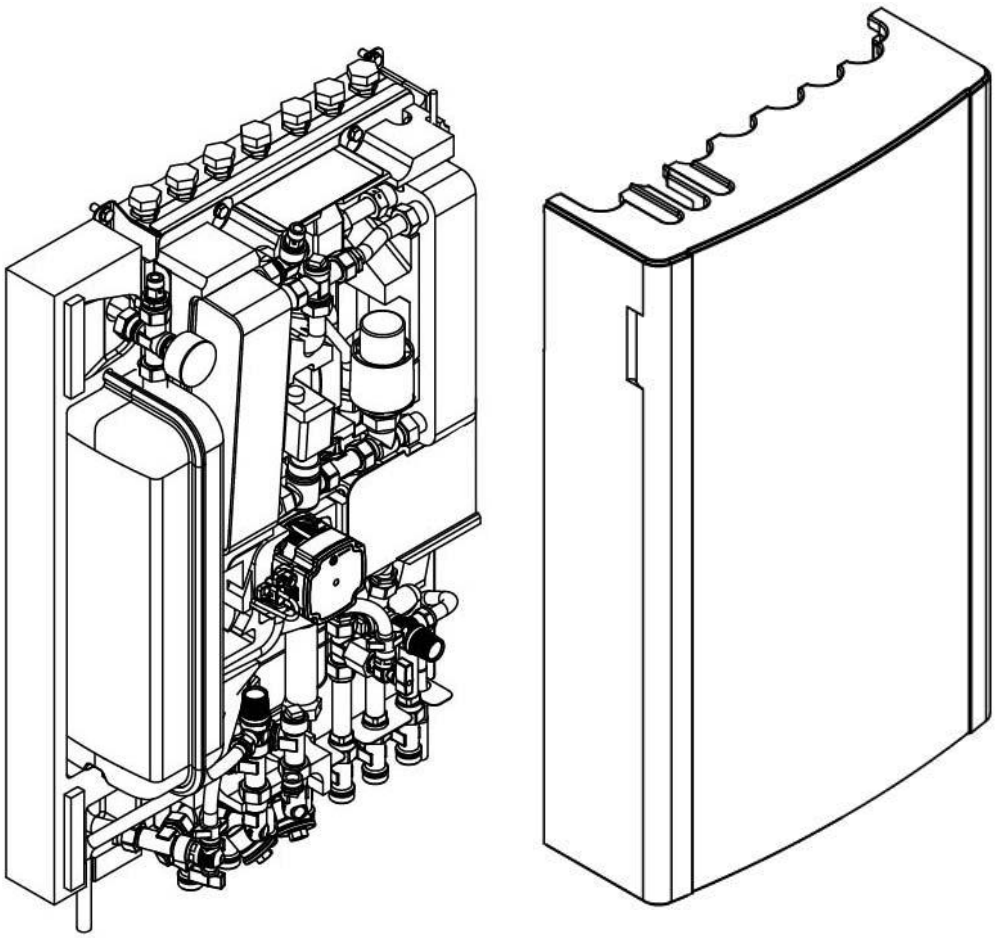

DOC1392, 19-10-2026

For additional on-line information, latest version of this manual please scan the qr-code or use the link *https://www.cetetherm.com/minieco*.

QR-code:

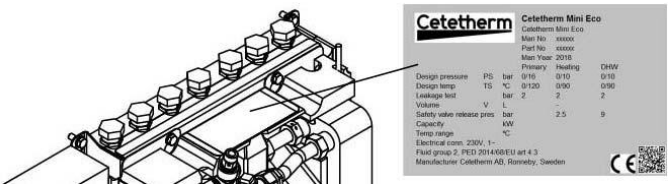

This manual is published by Cetetherm.

Cetetherm can without further notice make changes and improvements to the content in this manual if it is necessary due to printing mistakes, wrong information or changes in the hardware or software.

All these types of changes will be included in future release of the manual.

Contents

1 General information ... 5
1.1 Comfort ... 5
1.2 Installation ... 5
1.3 Long-term security ... 5
1.4 CE-marking ... 5
1.5 Information about the document ... 5
1.6 General warnings ... 6
2 Operating instructions ... 7
2.1 General operation ... 7
2.2 Safety equipment/inspection ... 7
3 Product overview ... 8
3.1 Product overview Mini ECO F1 ... 8
3.2 Product overview Mini ECO F2 ... 9
3.3 Product overview Mini ECO F3 ... 10
3.4 Product overview Mini ECO F4 ... 11
3.5 Product overview Mini ECO F5 ... 12
3.6 Product overview Mini ECO F7 ... 13
4 Installation ... 14
4.1 Unpacking ... 14
4.2 Preparation ... 14
4.2.1 Preparation UK market ... 14
4.3 Mounting the HIU ... 14
4.4 Filling up the system ... 15
4.4.1 Filling up the tap water circuit ... 15
4.5 Filling up and bleeding the heating circuit ... 15
4.5.1 Connect to heating network ... 15
4.6 Connecting the electrical equipment ... 15
4.7 Mounting options ... 16
4.8 Commissioning advice Mini ECO ... 16
4.9 General adjustments and settings ... 16
4.10 Dismantlement ... 16
4.11 Installing the room thermostat Round ... 17
4.12 Installing the outdoor temperature sensor ... 18
4.13 Starting up sequence for Mini ECO with component check ... 18
5 Room thermostat Round ... 19
5.1 General ... 19
5.2 Control modes ... 20
5.3 Changing control mode, OTC heating curve and max supply temperature ... 20
5.4 OTC control mode, default setting ... 21
5.5 Viewing the room temperature ... 21
5.6 Viewing the set room temperature ... 21
5.7 Changing temperature setting ... 21
5.8 Setback ... 21
5.9 Summer heating ... 21
5.10 Display symbols ... 22
5.11 Fault messages on the room thermostat ... 23
5.12 Fault codes on room thermostat Round ... 23
5.13 Factory settings, room thermostat ... 24
6 Pump settings and pump performance ... 25
6.1 Grundfos UPM3 Auto ... 25
6.2 Alarm status ... 25
6.3 Changing the control mode ... 26
6.3.1 Proportional-pressure curve ... 26
6.3.2 Constant-pressure curve ... 26
6.3.3 Constant curve ... 26
6.4 Pump curve proportional pressure mode 2, PP2 ... 27

6.5 Fault finding pump ... 28
7 Electrical connections ... 29
8 Schematic diagram, main components ... 30
8.1 Mini ECO F1 ... 30
8.2 Mini ECO F2 ... 30
8.3 Mini ECO F3 ... 31
8.4 Mini ECO F4 ... 31
8.5 Mini ECO F5 ... 32
8.6 Mini ECO F7 ... 32
9 Service instructions ... 33
9.1 Tap water service instructions ... 33
9.1.1 Tap water temperature too low ... 33
9.1.2 Tap water temperature too high ... 34
9.1.3 Hot water temperature unstable or too low ... 34
9.2 Heating system service instructions ... 35
9.2.1 Heating system temperature too high or too low ... 35
9.2.2 No heating ... 36
9.2.3 Heating temperature unstable ... 37
9.2.4 Disturbing noise from the circulation pump or the radiator system ... 37
9.2.5 Heating system often needs topping up ... 38
10 Service actions for the installer ... 39
10.1 Check the function of the valve for hot water ... 39
10.2 Check the function of the heating actuator and valve ... 40
10.3 Check the volume take-up and pressure equalizing of the expansion vessel ... 40
11 Maintenance and repairs ... 41
11.1 Cleaning the heating media filter ... 41
11.2 Cleaning the heating circuit filter ... 42
11.3 Change pump components or the complete pump ... 42
11.4 Change the hot water actuator and heat exchanger ... 43
11.5 Change the hot water valve ... 43
11.6 Change the heating actuator ... 44
11.7 Change the heating valve ... 44
11.8 Change the heating circuit supply temperature sensor ... 45
11.9 Change the outdoor temperature sensor ... 45
11.10 Change the DHWC check valve ... 46
11.11 Change the expansion vessel ... 46
11.12 Change the differential pressure control valve ... 47
12 Operating data and performance ... 48
12.1 Technical Data ... 49
12.2 Measure sketch ... 49
13 Options ... 50
13.1 Differential pressure control valve, DPC ... 50
13.1.1 Setting the DPC valve ... 50
13.1.2 Flow rate graph of the DPC ... 50
13.2 Safety thermostat ... 51
13.2.1 Parameters and recommended settings for under floor heating ... 51
13.3 Valve kit with service bypass and binder points ... 52
13.3.1 Using the valve kit with service bypass and binder points ... 52

1 General information

Cetetherm Mini ECO is a complete, ready-to-install heating network HIU for hot water and heating. It is designed for buildings with a connection to a heating network.
Cetetherm has years of experience in heating network technology and has developed Cetetherm Mini ECO with well-planned pipe work and with all components easily accessible for inspection and future servicing.

1.1 Comfort

Cetetherm Mini ECO has fully-automatic temperature control for heating and hot water. The hot water is controlled and maintained at the desired temperature.
The heating circuit is controlled in relation to outdoor temperature and/or desired room temperature by means of a controller and temperature sensor.

1.2 Installation

Read this manual before installing the HIU.

Compact dimensions, light weight, well-arranged plumbing and factory-complete internal wiring – all make installation very simple. A pre-programmed control unit and a power cable already fitted with a plug make things even simpler to allow immediate start-up.

Mini ECO is designed for hanging on wall and is mounted on an insulated frame and includes an insulated cover. Better insulation means less energy usage and better energy efficiency.

1.3 Long-term security

The heat exchanger plates and all piping are manufactured in acid-resistant stainless steel. All components are closely matched and carefully tested to function in accordance with 3rd party certified quality assurance system ISO 9001.
For future servicing requirements, all components are accessible and individually replaceable.

1.4 CE-marking

Cetetherm Mini ECO follows the rules and legislation specified in the Declaration of Conformity.
To maintain the validity of the CE marking, only identical replacement parts must be used.

1.5 Information about the document

All pictures in this document are general images.
Mini ECO is available in different models and levels of equipment.

1.6 General warnings

⚠	The installation work must be carried out by an authorized installation contractor. Before the system is taken into operation, it must be pressure tested in accordance with relevant regulations.
⚠	The temperature and the pressure of the primary heating water are very high. **Only qualified technicians** are allowed to work with the HIU. Incorrect operation may cause serious personal injury and result in damage to the building.
⚠	If the hot water temperature is set too high, people may be scalded. If the hot water temperature is set too low, unwanted bacteriological growth may occur in the hot water system. This can result in serious personal injury.
⚠	Parts of the HIU may get very hot and should not be touched.
⚠	When starting up the HIU: To avoid the risk of scalding, make sure that no-one draws any hot water until the hot water temperature has been adjusted.
⚠	Start heating circulation by first opening the valves in the **heating media supply** and then **return** lines, to avoid pollutions in the system. Open the valves slowly to avoid pressure surges. Then open **heat return** and then **supply**.
⚠	Before the HIU is connected to the electrical supply, make sure that the heating system is topped up with water. Starting up the system without water will damage the circulation pump.
⚠	The HIU comes prepared with an electrical plug to be connected to the main supply. If necessary, the plug-and-socket connection can be replaced with a permanent installation with an all-pole isolate switch. This must be carried out by a qualified electrician.

2 Operating instructions

2.1 General operation

The temperature and pressure of the incoming heating network water are very high. The heat from the heating network water is transferred to the heating and hot water systems of the building in the heat exchangers. The heat is transferred through thin plates of acid-resistant stainless steel which keep the heating network water separate from the systems in the building.

Mini ECO has automatic temperature control for hot water. This measures the temperature of the hot water in the heat exchanger and automatically controls the primary flow.

The hot water temperature is controlled by a temperature control system which is set to about 50 ºC.
If the temperature is set too high, there is a risk of scalding. Setting the hot water temperature too low may result in unwanted bacteriological growth in the hot water system.

The heating circuit is controlled in relation to outdoor temperature and/or desired room temperature by means of a room thermostat or outdoor temperature sensor (option) or via a universal input.

When no heating flow is required, the heating circulation pump stops automatically, but is run occasionally to prevent seizing up due to standing still for a long time.

After adjustment, the Mini ECO operates completely automatically. However, in hard water areas it is advisable to be attentive and to remedy any faults in good time if the temperature of the hot water is too high; otherwise the risk of lime deposits in the heat exchanger may increase.

The energy supplier registers the use of energy. Measurement is done by recording the flow of heating network medium through the system, and by measuring the temperature difference between the medium’s supply and return flow.

2.2 Safety equipment/inspection

- Weekly inspection to check for leaks from pipes or components.
- Weekly inspection to make sure that the operation of the heating and hot water control systems is stable and that the temperature does not fluctuate. Temperature hunting causes unnecessary wear of valves, thermostats and heat exchangers.
- Every three months check the safety valves and the pressure in the heating system.

To check the operation of a safety valve, turn its wheel/knob until water escapes from the waste pipe of the valve, then close the wheel/knob quickly. Occasionally a safety valve may open automatically to release excess pressure. After a safety valve has been open it is important that it closes properly and does not drip.

3 Product overview

3.1 Product overview Mini ECO F1

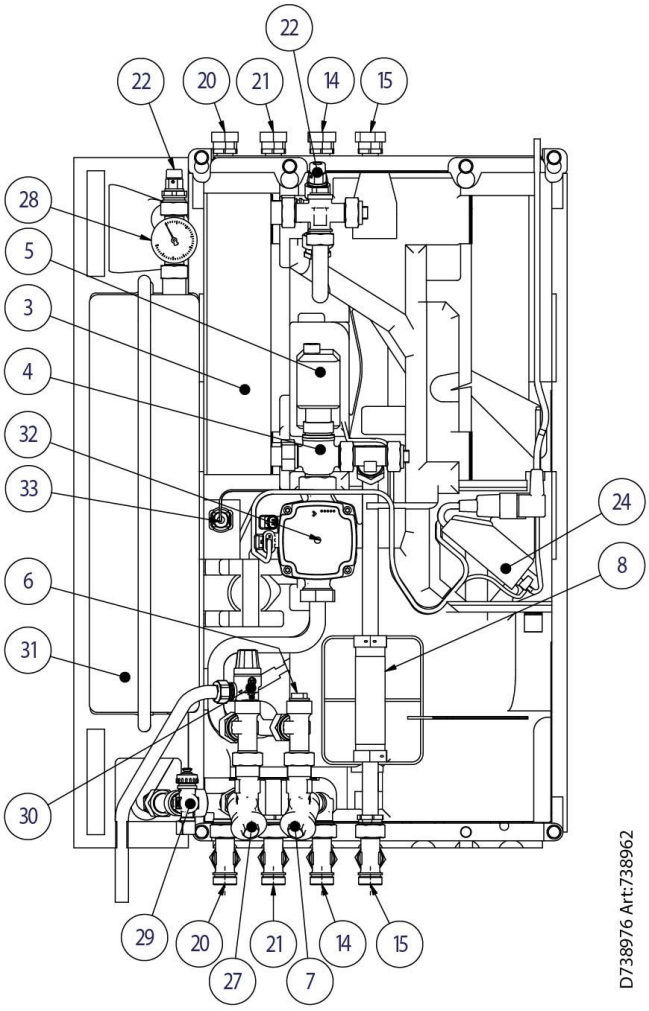

3.	Heat exchanger for heating	24.	Connection box for electric power and sensors, heating circuit
4.	Control valve, heating circuit	25.	Room thermostat/control panel *
5.	Actuator, heating circuit	26.	Outdoor temperature sensor (option) *
6.	Temperature sensor connection, heating media supply	27.	Filter heating circuit
7.	Filter for heating media	28.	Pressure gauge for heating circuit
8.	Adapter for energy meter	29.	Filling valve
14.	Heating network media, supply (primary inlet)	30.	Safety valve for heating circuit
15.	Heating network media, return (primary return)	31.	Expansion vessel heating circuit
20.	Heating circuit, return	32.	Circulation pump, heating circuit
21.	Heating circuit, supply	33.	Supply temperature sensor, heating circuit
22.	Air vent valve	34.	Valve kit (option) *

*) not shown in picture

3.2 Product overview Mini ECO F2

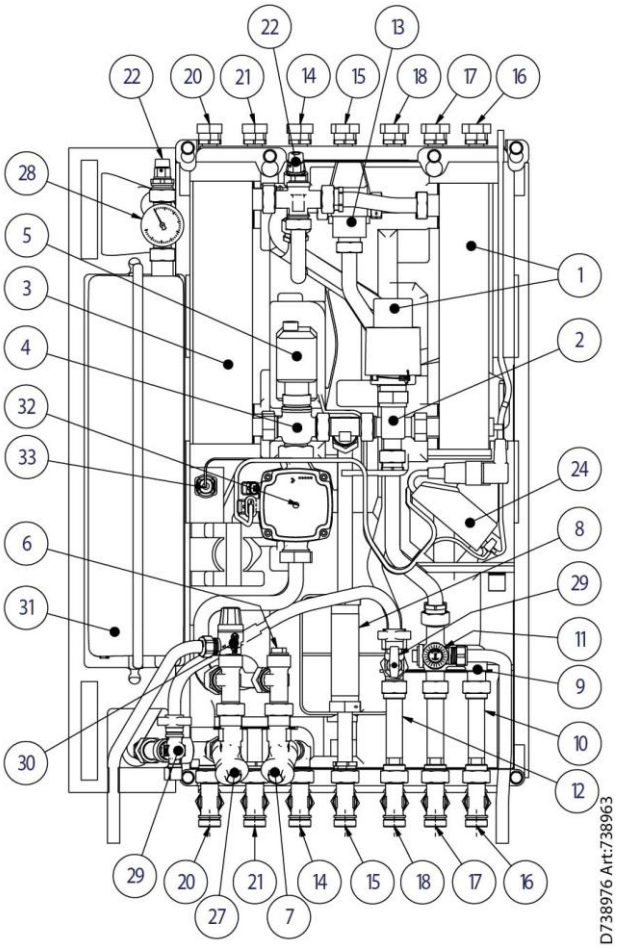

1.	Heat exchanger and temperature controller for hot water	17.	Cold water outlet (cw)
2.	Control valve for hot water	18.	Hot water (hw)
3.	Heat exchanger for heating	20.	Heating circuit, return
4.	Control valve, heating circuit	21.	Heating circuit, supply
5.	Actuator, heating circuit	22.	Air vent valve
6.	Temperature sensor connection, heating media supply	24.	Connection box for electric power and sensors, heating circuit
7.	Filter for heating media	25.	Room thermostat/control panel *
8.	Adapter for energy meter	26.	Outdoor temperature sensor (option) *
9.	Check valve for cold water	27.	Filter heating circuit
10.	Adapter for Cold water flow meter	28.	Pressure gauge for heating circuit
11.	Safety valve for domestic hot water	29.	Filling valve
12.	Adapter for Hot water flow meter	30.	Safety valve for heating circuit
13.	Safety temperature limiter hot water	31.	Expansion vessel heating circuit
14.	Heating network media, supply (primary inlet)	32.	Circulation pump, heating circuit
15.	Heating network media, return (primary return)	33.	Supply temperature sensor, heating circuit
16.	Cold water (cw)	34.	Valve kit (option) *

*) not shown in picture

3.3 Product overview Mini ECO F3

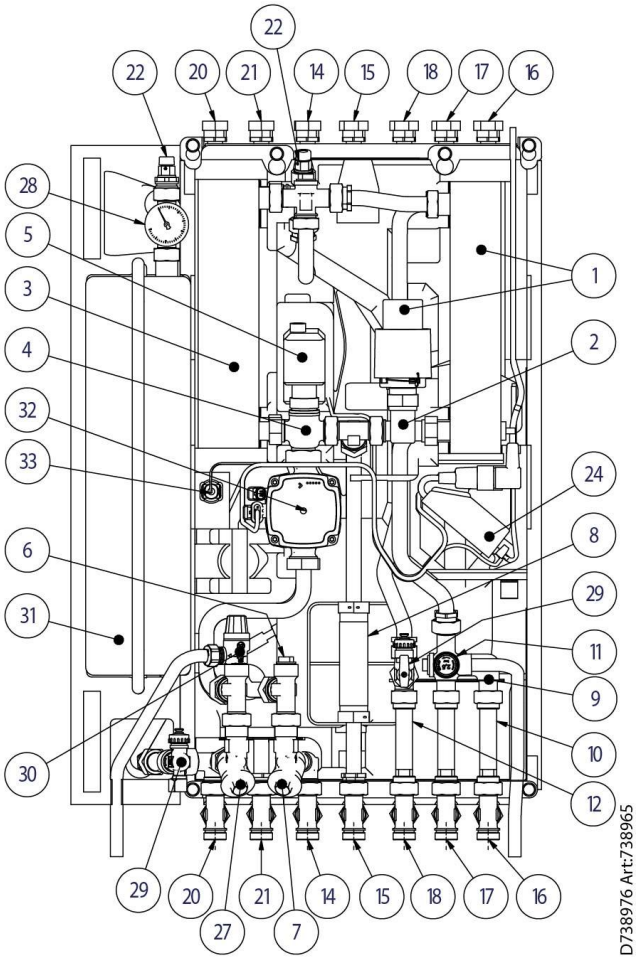

1.	Heat exchanger and temperature controller for hot water	18.	Hot water (hw)
2.	Control valve for hot water	20.	Heating circuit, return
3.	Heat exchanger for heating	21.	Heating circuit, supply
4.	Control valve, heating circuit	22.	Air vent valve
5.	Actuator, heating circuit	24.	Connection box for electric power and sensors, heating circuit
6.	Temperature sensor connection, heating media supply	25.	Room thermostat/control panel *
7.	Filter for heating media	26.	Outdoor temperature sensor (option) *
8.	Adapter for energy meter	27.	Filter heating circuit
9.	Check valve for cold water	28.	Pressure gauge for heating circuit
10.	Adapter for Cold water flow meter	29.	Filling valve
11.	Safety valve for domestic hot water	30.	Safety valve for heating circuit
12.	Adapter for Hot water flow meter	31.	Expansion vessel heating circuit
14.	Heating network media, supply (primary inlet)	32.	Circulation pump, heating circuit
15.	Heating network media, return (primary return)	33.	Supply temperature sensor, heating circuit
16.	Cold water (cw)	34.	Valve kit with service bypass & binder points (option) *
17.	Cold water outlet (cw)		*) not shown in picture

3.4 Product overview Mini ECO F4

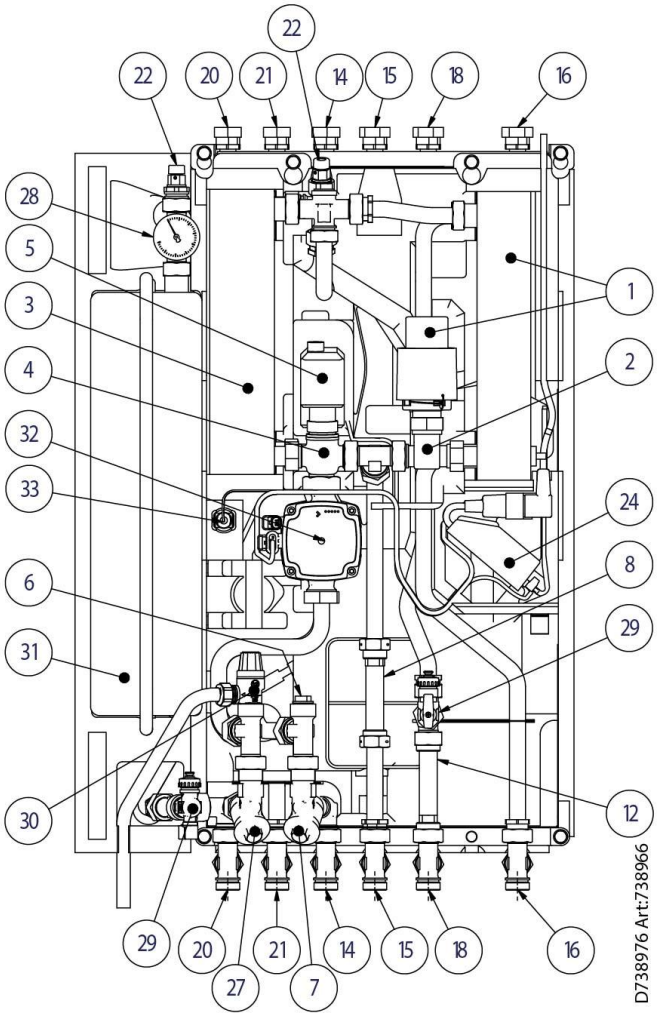

1.	Heat exchanger and temperature controller for hot water	21.	Heating circuit, supply
2.	Control valve for hot water	22.	Air vent valve
3.	Heat exchanger for heating	24.	Connection box for electric power and sensors, heating circuit
4.	Control valve, heating circuit	25.	Room thermostat/control panel *
5.	Actuator, heating circuit	26.	Outdoor temperature sensor (option) *
6.	Temperature sensor connection, heating media supply	27.	Filter heating circuit
7.	Filter for heating media	28.	Pressure gauge for heating circuit
8.	Adapter for energy meter	29.	Filling valve
12.	Adapter for Hot water flow meter	30.	Safety valve for heating circuit
14.	Heating network media, supply (primary inlet)	31.	Expansion vessel heating circuit
15.	Heating network media, return (primary return)	32.	Circulation pump, heating circuit
16.	Cold water (cw)	33.	Supply temperature sensor, heating circuit
18.	Hot water (hw)	34.	Valve kit (option) *
20.	Heating circuit, return		*) not shown in picture

3.5 Product overview Mini ECO F5

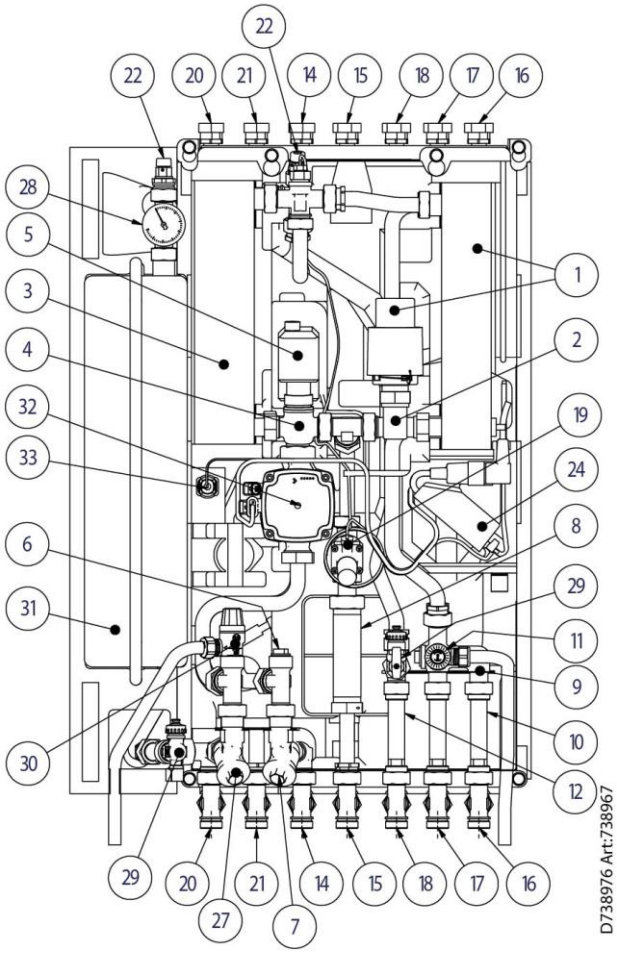

1.	Heat exchanger and temperature controller for hot water	18.	Hot water (hw)
2.	Control valve for hot water	19.	Differential pressure controller
3.	Heat exchanger for heating	20.	Heating circuit, return
4.	Control valve, heating circuit	21.	Heating circuit, supply
5.	Actuator, heating circuit	22.	Air vent valve
6.	Temperature sensor connection, heating media supply	24.	Connection box for electric power and sensors, heating circuit
7.	Filter for heating media	25.	Room thermostat/control panel *
8.	Adapter for energy meter	26.	Outdoor temperature sensor (option) *
9.	Check valve for cold water	27.	Filter heating circuit
10.	Adapter for Cold water flow meter	28.	Pressure gauge for heating circuit
11.	Safety valve for domestic hot water	29.	Filling valve
12.	Adapter for Hot water flow meter	30.	Safety valve for heating circuit
14.	Heating network media, supply (primary inlet)	31.	Expansion vessel heating circuit
15.	Heating network media, return (primary return)	32.	Circulation pump, heating circuit
16.	Cold water (cw)	33.	Supply temperature sensor, heating circuit
17.	Cold water outlet (cw)	34.	Valve kit (option) *

*) not shown in picture

3.6 Product overview Mini ECO F7

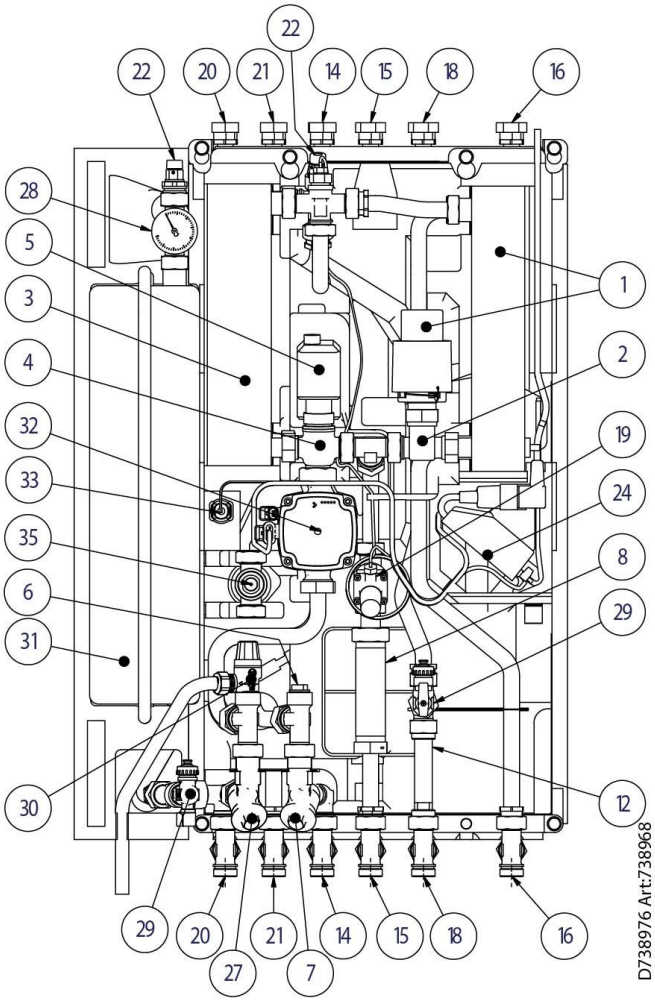

1.	Heat exchanger and temperature controller for hot water	21.	Heating circuit, supply
2.	Control valve for hot water	22.	Air vent valve
3.	Heat exchanger for heating	24.	Connection box for electric power and sensors, heating circuit
4.	Control valve, heating circuit	25.	Room thermostat/control panel *
5.	Actuator, heating circuit	26.	Outdoor temperature sensor (option) *
6.	Temperature sensor connection, heating media supply	27.	Filter heating circuit
7.	Filter for heating media	28.	Pressure gauge for heating circuit
8.	Adapter for energy meter	29.	Filling valve
12.	Adapter for Hot water flow meter	30.	Safety valve for heating circuit
14.	Heating network media, supply (primary inlet)	31.	Expansion vessel heating circuit
15.	Heating network media, return (primary return)	32.	Circulation pump, heating circuit
16.	Cold water (cw)	33.	Supply temperature sensor, heating circuit
18.	Hot water (hw)	34.	Valve kit (option) *
19.	Differential pressure controller	35.	Prepayment valve
20.	Heating circuit, return		

*) not shown in picture

4 Installation

4.1 Unpacking

- Remove the transport packaging and check that the product has not been damaged in transit and that the consignment agrees with the specifications.
- When lifting the unit take care not to apply stress to pipes and heat exchanger as this may weaken them. Avoid lifting the unit by holding the heat exchanger.

  Note: Risk of injury lifting heavy objects.

4.2 Preparation

- Mini ECO must be placed on a wall, in upright position. Mount the unit using screws or bolts suitable for the material of the wall and for the weight of the unit.
- Choose a suitable installation area in accordance with official regulations.
  The HIU may generate sounds during operation caused by pumps, regulators systems, flows etc. This should be taken in consideration during installation of the unit so that possible operational sounds affect the surroundings as little as possible.
- Cetetherm recommends that the HIU is mounted on well-insulated walls, such as outer walls or on concrete walls.
- Check the applicable regulations of the primary heating supplier. The available differential pressure should be at least 50 kPa and at most 600 kPa.
- Where the differential pressure is higher, a differential pressure controller should be added to the installation.

4.2.1 Preparation UK market

- The maximum operating pressure for the heating and DHW is 0,5 bar under the relif pressure of the safety-valve.

4.3 Mounting the HIU

- Before mounting the HIU tighten the pipe connection *Heating network media, supply* and *Heating network media, return* with 45 Nm.
- Mount the HIU on the wall with four screws.
  Cetetherm recommends having 900 mm from floor to the HIU.
- Place gaskets on the valves and use hand power and fasten the nuts to the pipes on the HIU.
- Tighten with 45 Nm.
- Close all valves.
- Connect the pipe work to the valves.

The temperature and the pressure of the primary heating water are very high.
Only qualified technicians can work with the HIU. Incorrect operation may cause serious personal injury and result in damage to the building.

- Energy meters see *3 Product overview*, must be installed at a prepared location, replacing a gauge block, or following the instructions of the energy supplier.
- Mount the provided draining pipe to the safety valve on the cold water circuit.
- Connect a hose or a pipe from the safety valves to the floor gully.

4.4 Filling up the system

- Fill up the system with water by opening the valves on the first fix-jig.

The valves must be opened in the correct order to avoid pollutions in the system.
Open the valves slowly to avoid pressure surges.

4.4.1 Filling up the tap water circuit

- Open the valves *Cold water*, *Cold water outlet* and *Hot water*.
- Open all water taps in the building to get rid of trapped air. Let them be open until all air is gone.

4.5 Filling up and bleeding the heating circuit

- Attach the long, provided filing hose between the filling valves, to fill up the heating circuit.
- Open the valves *Heating circuit return* and *Heating circuit supply*.
- Open the filling valves.
- Fill up the system until the manometer shows 1,6 Bar.
- Close the filling valves.
- Bleed the heating system via the air vent valves and at the heating systems draining places e.g. radiator valves.
- If the pressure is low after bleeding the system, open the filling valves and fill up to 1,6 Bar again.
- The first time the heating system is filled up, this procedure might have to be repeated several times.
- When the pressure is correct and the heating system is drained from air, remove the filling hose.

4.5.1 Connect to heating network

- Open the valves *Heating network media, supply* and *Heating network media, return.*
  Start with supply then return.
- When all connections are done and the all circuits are pressurized, look for leaks.
- If connections need retightening after the installation has been taken into service, the system must be depressurised. If the system is not depressurised, gaskets will be damaged.

4.6 Connecting the electrical equipment

- Remove the lid that covers the connection box and loosen the connection box from the insulation.

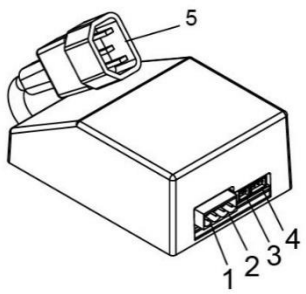

1	Universal input for connecting e.g. outdoor temperature sensor, flow switch, relay contact, strap
2	Room thermostat
3	Supply temperature sensor
4	Actuator, heating
5	Power cable adapter

- Install the room thermostat;
  Room thermostat Round: see *4.11 Installing the room thermostat Round*.
- Connect the non-polarity contact from the room thermostat to the connection box.
  Carefully press the cable into the trail in the insulation.
- Mount the outdoor temperature sensor on the north side of the building, 2 metres above the ground, or higher. See *4.13 Installing the outdoor temperature sensor*.

- Connect the non-polarity contact from the outdoor temperature sensor to the connection box. Carefully press the cable into the trail in the insulation.
- Connect the correct power cable to connection box and press the box and cable into the trail in the insulation.
- Place the lid over the connection box.
- Put the electrical cable into a wall outlet.
  See *4.13 Starting up sequence for Mini ECO with component check*.
- Mount the insulation cover. Always use the handles on the side when handling the cover

4.7 Mounting options

- If the HIU is connected to a system sensitive to high temperature or to a low temperature system, for example floor heating, a safety thermostat must be mounted and activated before starting up.
  For more information *13.2 Safety thermostat*.

4.8 Commissioning advice Mini ECO

- Adjust the hot water temperature by having a hot water tap open at normal flow rate.
  Measure the temperature at the draw-off point with a thermometer. It takes about 20 seconds to get a stable tap water temperature.
  The temperature should be minimum 50 °C.

  Cetetherm recommends that the primary inlet temperature is at least 10º higher than the tap water temperature. **NOTE**: Make sure that no cold water is mixed with the hot water while making this adjustment.

  Seal the hot water actuator after setting.
- Set the control mode on the control panel.
  Control panel Round has been pre-set at the factory to use control mode; Outside Temperature Control (OTC control).
  To change control mode see 5 *Room thermostat Round*.

4.9 General adjustments and settings

The property owner must be instructed in the operation, setting and care of the unit.
It is particularly important to provide information about the safety systems and about hazards that may arise in relation to the high pressure and temperature of the primary heating water.

4.10 Dismantlement

When the time comes for the HIU to be dismantled and scrapped it must be disposed of in the correct manner in accordance with local or national regulations.

4.11 Installing the room thermostat Round

1 Removing power supply

2 Placement

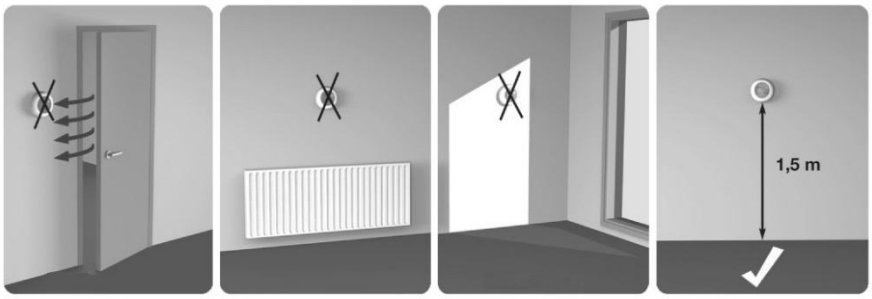

3 Removing the dial

4 Removing the thermostat

5a Mounting direct on the wall

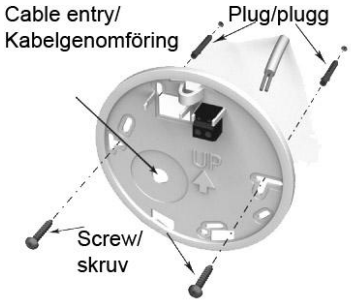

5b Mounting in wall socket

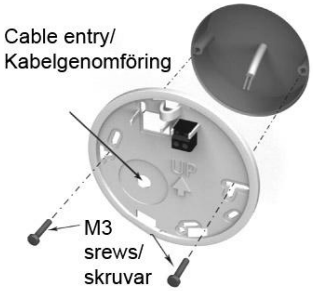

6 Connecting the cable

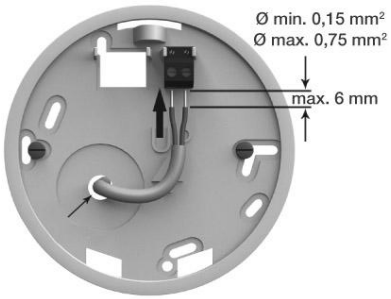

7 Mounting the thermostat

8 Mounting the dial

4.12 Installing the outdoor temperature sensor

Connect the outdoor temperature sensor to the electric box.
With a conductor area of 0.6 mm^2 the maximum cable length is 50 metres, maximum 5 Ω/conductor.

If the outdoor temperature sensor is connected later, for example in a construction period, the room thermostat must be restarted.
See *5.3 Changing control mode, OTC heating curve and max supply temperature*.

4.13 Starting up sequence for Mini ECO with component check

The HIU must be filled with water before starting the room thermostat, if not the pump can be damage.

- Put the electrical cable from the control panel into a wall outlet.
- We recommend using an earth fault breaker.
- A check of the actuator and pump function starts.
  During start-up sequence, the components manoeuvre by the following schedule:
  - 10 s actuator closes – turns clockwise - if not already closed
  - 10 s actuator opens - turns counterclockwise
  - 10 s actuator closes – turns clockwise
  - 10 s pump runs
  - 150 s actuator closes.
- The next five minutes, the pump starts running and control begins to regulate to 37 °C.

Note: Under certain operating conditions, 37 °C is not reached within 5 min. The Actuator knob should however have moved counterclockwise.

When start-up sequence is completed the room thermostat returns to last set control mode.

Note: If there is no heat demand the pump stops after the start-up sequence.

5 Room thermostat Round

5.1 General

The room thermostat Round controls the supply temperature to the heating system.
First time the room thermostat is started is use default control mode Outside Temperature Control (OTC control).
The room thermostat is programmable and has five different control modes to select between.

Features

- Ergonomic user interface.
- A simple twist of the dial will adjust the temperature set point up or down.

1	LCD display
2	Dial
3	Right touch button
4	Left touch button

Display (1)
The LCD has backlight; the backlight enables to read the data on the LCD in the dusk and dark.
The backlight is switched off 10 seconds after last use.

In operating mode 2 (OTC control) the set room temperature is displayed in the window.
In operating mode 1 and 3 (RTC and RTC+OTC), the current room temperature is displayed by default in the window.
The thermostat measures the room temperature continuously in the room where it hangs.

Dial (2)
Turn the dial one "click" to see the setting of room temperature, if using control mode 1 and 3.
Turn the dial to change settings. Turn clockwise to increase and counter clockwise to decrease a setting.

Right touch button (3)
Use together with the left touch button to enter setting menu.

Left touch button (4)
Use together with the right touch button to enter setting menu.

Press to change parameter values and settings in different menus, change control mode, set max supply temperature, change heat curve slope.

5.2 Control modes

The room thermostat has five different control modes to select between; the default mode is Outside Temperature Control (OTC control).

1. **Room temperature control RTC**
   Supply setpoint is calculated based on the room temperature setpoint and the actual room temperature.
2. **OTC control**
   Require a connected outdoor temperature sensor.
   Supply setpoint is purely based on the outside temperature.
3. **OTC control with room temperature compensation (OTC+RTC)**
   Require a connected outdoor temperature sensor.
   Supply setpoint is based on the outside and room temperature.
4. **Constant supply temperature (with closed contact)**
   Select a fixed supply temperature setpoint. The heat is **on** when the contact (pos 1) is **closed**.
   NOTE: The heating is off when the contact is open- there are no active valves- or pump anti seizing measure.
   NOTE: Does not work with an outdoor thermostat connected.
5. **Constant supply temperature (with open contact)**
   Select a fixed supply temperature setpoint. The heat is **on** when the contact (pos 1) is **open**.
   NOTE: The heating is off when the contact is closed -there are no active valves- or pump anti seizing measure.
   NOTE: Does not work with an outdoor thermostat connected.

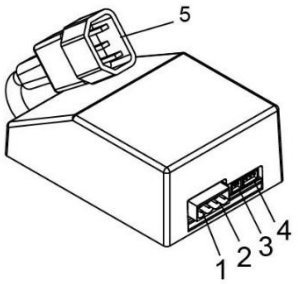

1	Universal input for connecting e.g. outdoor temperature sensor, flow switch, relay contact, strap
2	Room thermostat
3	Supply temperature sensor
4	Actuator, heating
5	Power cable adapter

5.3 Changing control mode, OTC heating curve and max supply temperature

Three different settings can be done:

- Control mode (1-5)
- Heating curve (4-40)
- Max supply temperature (30 °– 80 °C)

- Turn the dial down to 10°C. The display starts to flash.
- While the display is flashing it is possible to enter the setting menu by pressing both right and left touch button for 10 seconds.
- Use the dial to choose control mode, 1-5.
  Confirm the choice within 10 secs by pressing the left touch button.
- Choose the heating curve with the dial, 4-40.
  Confirm the choice within 10 secs by pressing the left touch button.
- Choose max supply temperature with the dial, 30°-80°C.
  Confirm the choice within 10 secs by pressing the left touch button.
- When all settings are done wait a few seconds and the room thermostat automatically leaves the setting menu in 10 seconds.
- After changing the control mode, wait at least 30 seconds and then restart the room thermostat. This is to ensure correct function.

5.4 OTC control mode, default setting

The room thermostat controls the indoor temperature as a function of the measured outside air temperature.
The heat curve is the ratio between the measured outside air temperature and the calculated supply water temperature.
The ideal heating curve is dependent on the type of installation (radiators, convectors, etc.), the thermal properties and the location of the property.

A heating curve ratio of 1 to 40 can be set. The figure shows several heating curve ratios for a room temperature setting of the 20°C **without** room temperature compensation.

Heat curve 10 has been set at the factory.

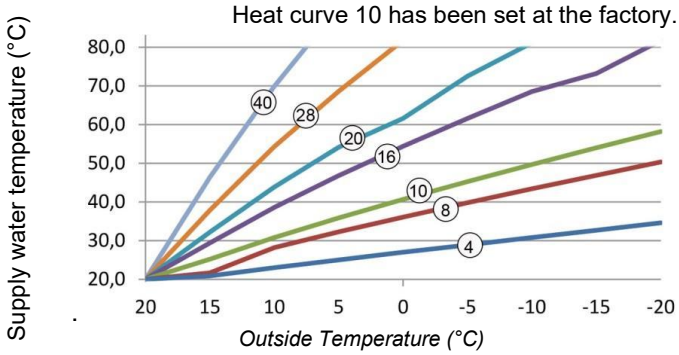

Heating curve ratio is at room temperature setting of 20°C

5.5 Viewing the room temperature

Note: Only valid with control mode 1-3.
The room temperature is displayed by default. The thermostat measures the room temperature continuously in the room where it hangs.

5.6 Viewing the set room temperature

Note: Only valid with control mode 1-3.
The set temperature is the desired temperature in the room where the thermostat is located.

Check the set temperature; by rotating the dial ring one way or tactile click clockwise.
The set temperature will flash.
After five secs, the display returns to show the room temperature.

Note: During commissioning, the standard set temperature is 17 °C.

After power failure the last set temperature will always be active.

5.7 Changing temperature setting

Change the temperature setting by rotating the dial ring. With each click counter-clockwise decreases the set temperature with half a degree. Each click clockwise increases the temperature by half a degree.

During setting the temperature is flashing. At the desired temperature, allows the ring loose.
After five seconds, the display will show the actual room temperature or the set supply temperature, depending on set control mode.

If using control mode 1-3 the thermostat will adjust the room temperature as closely as possible to the newly set temperature.

5.8 Setback

In the absence and at night the thermostat can manually be set at a lower temperature to save energy.
In general, it is recommended a reduction of up to 5 °C. Under the influence of the warm-up capacity of the plant and the degree of isolation of the property may be desired another temperature drop.

5.9 Summer heating

If measured outdoor temperature is higher than the pre-set temperature *Outside Limit* (20 °C), the pump should not be operating.

5.10 Display symbols

Control mode	Display will show		
1 RTC			Shows the **actual** room temperature with one decimal and in 0.5 steps when the room temperature is used.
2 OTC	▲ ▼		Shows the room temperature **setpoint** with one decimal and in 0.5 steps when temperature control mode is OTC.
3 RTC+OTC			Shows the **actual** room temperature with one decimal and in 0.5 steps when the room temperature is used.
4 Constant supply temperature with closed contact	▲		Shows the requested supply temperature when the room temperature is not used.
5 Constant supply temperature with open contact	▼		Shows the requested supply temperature when the room temperature is not used.

	Heating on Means there is a requirement for some heating
	SummerHeating is active
	There is an ongoing alarm

5.11 Fault messages on the room thermostat

If a spanner is visible on the display there is an ongoing alarm.

On the display	Cause
F	Fault code is shown on 7-segments
--	Internal fault (like sensor fault)
out	There is no (valid) outside temperature
dhc	Room thermostat not connected to a correct connection box
ot	Fault in the communication module in the connection box, for electric power and sensors, heating circuit.

5.12 Fault codes on room thermostat Round

Fault code 0	**No fault, power up**
Fault code 1	**Supply sensor or cable**
Cause	Measured supply water temperature is below 0 °C or above 100 °C.
Actions	The control panel turn the pump off and enter off mode (frost protection). Check the supply sensor and its cable.
Fault code 2	**Outside sensor out of operating range. This fault code can only occur after the measured outside temperature has been in range: -40 °C to 60 °C**.
Cause	Measured outside temperature is below -40 °C or above 60 °C
Actions	Enter room compensation until a valid temperature has been measured. Check the outside sensor and its cable.
Fault code 3	**Connection box temperature out of operating range**
Cause	Measured environment temperature is below -0 °C or above 60 °C.
Actions	The control panel turn the pump off and enter off mode (frost protection). Make sure that the HIU is mounted in a well vented room.
Fault code 4	**Cannot reach the set supply water temperature**
Cause	Air in the pump, low temp/ not district heating supply.
Actions	Vent the pump, check the control valve and actuator.
Fault code 7	**No communication between control panel and connection box**
Cause	The connection box does not communicate with the control panel (by OT) for 60 seconds.
Actions	Fault is only cleared after a power break and OT communication is working again. Check the control panel cable.
Fault code 8	**Outside sensor detected and heat demand input configured.**
Cause	Outside sensor detected and heat demand input configured
Actions	Heat demand input doesn’t work

5.13 Factory settings, room thermostat

Setting/function	Default Value	Setting/function	Default Value
Control mode	OTC	Min Room setpoint	10.0 °C
Room Temp Setpoint	17.0 °C	Max Room setpoint	27.0 °C
Constant Supply Temp Setpoint	40 °C	Min Supply setpoint	0 °C
OTC Ratio	10	Max Supply setpoint	60 °C
Setpoint lock	unlocked	Outside Limit (summer heating)	20 °C

6 Pump settings and pump performance

6.1 Grundfos UPM3 Auto

The HIU is equipped with the pump Grundfos UPM3 Auto.

When the pump is switched on it runs with the factory pre-setting or the last setting.
The pump is pre-set to run with operation mode, **proportional pressure mode 2, PP2**.

Operation mode indicates with LEDs on the pump front.

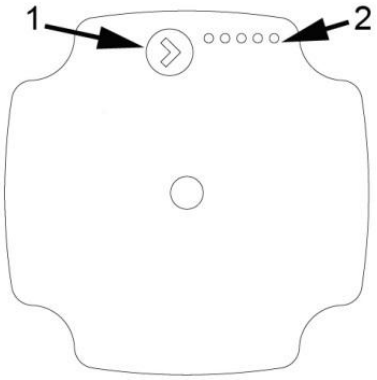

1 Push button
2 LEDs

The user interface shows with LED:

- operation status
- alarm status

6.2 Alarm status

Display	Indication	Pump operation	Counter action
	Rotor is blocked	Trying to start again every 1.33 seconds.	Wait or deblock the shaft.
	Supply voltage too low.	Only warning, pump runs.	Control the supply voltage.
	Electrical error.	Pump is stopped because of low supply voltage or serious failure.	Control the supply voltage / Exchange the pump.

6.3 Changing the control mode

To set the product, use the button on the operating panel. Every time you press the button, the pump setting is changed. The LEDs will indicate the chosen control mode.

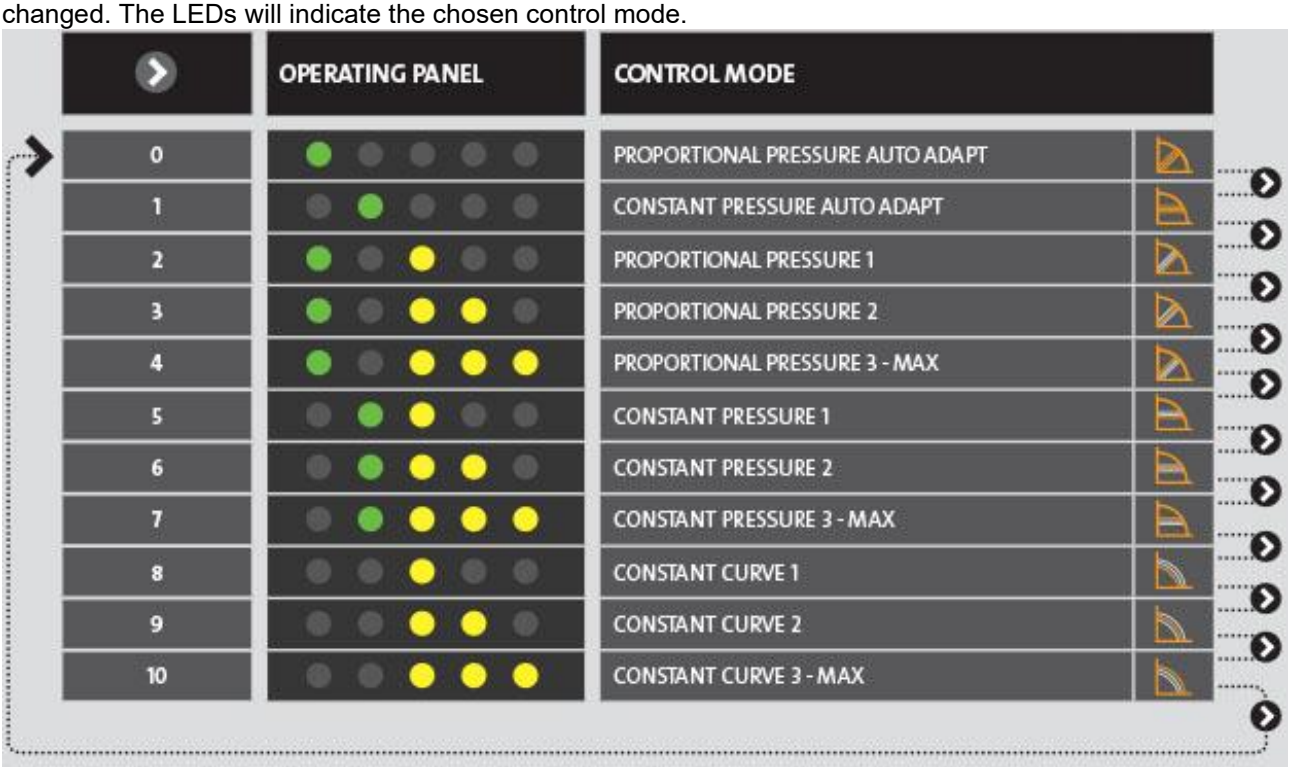

6.3.1 Proportional-pressure curve

The head (pressure) is reduced at falling heat demand and increased at rising heat demand.

The duty point of the pump will move up or down on the selected proportional-pressure curve, depending on the heating demand.

- PP1 is the lowest and PP3 is the highest proportional pressure curve
- AUTO$_{ADAPT}$ is the highest to lowest proportional pressure curve.

The AUTO$_{ADAPT}$ function enables the pump to control the pump performance automatically within a defined performance range.
In Proportional pressure AUTO$_{ADAPT}$, the pump is set to proportional-pressure control.

6.3.2 Constant-pressure curve

The head (pressure) is kept constant, irrespective of the heating demand.

The duty point of the pump will move out or in on the selected constant-pressure curve, depending on the heating demand in the system.

- CP1 is the lowest and CP3 is the highest constant-pressure curve
- AUTO$_{ADAPT}$ is the highest to lowest constant-pressure curve.

The AUTO$_{ADAPT}$ function enables the pump to control the pump performance automatically within a defined performance range.
In constant pressure AUTO$_{ADAPT}$, the pump is set to constant-pressure control.

6.3.3 Constant curve

The circulator runs on a constant curve, which means that it runs at a constant speed or power.
The duty point of the circulator moves up or down on the selected constant curve, depending on the heat demand in the system.

- CC1 is the lowest and CC3 is the highest constant curve.

6.4 Pump curve proportional pressure mode 2, PP2

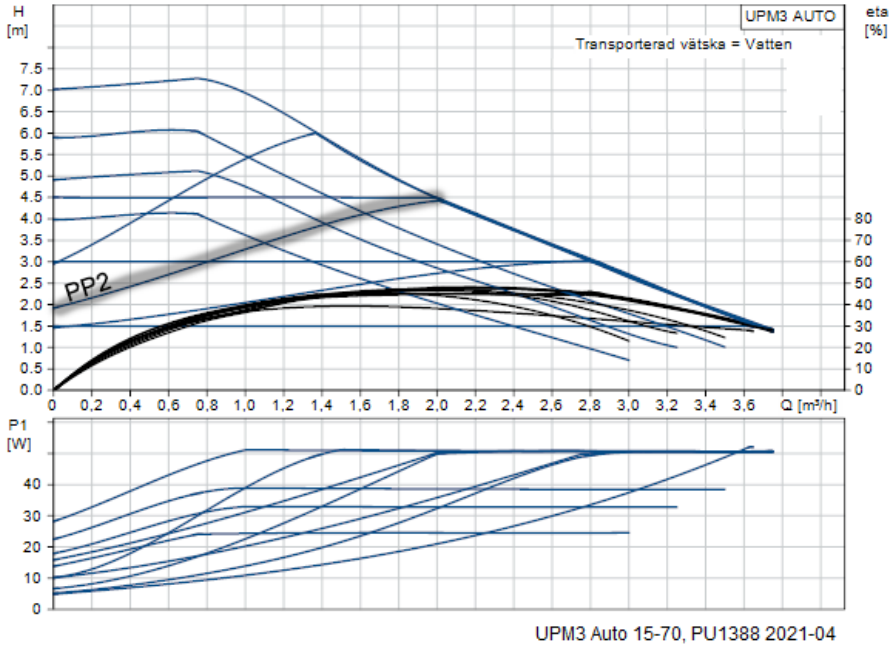

6.5 Fault finding pump

Before starting any work at the pump, switch off the power supply. Make sure that the power supply cannot be switched on accidentally.

Be aware that capacitors will be live up to 30 seconds after the power supply has been switched off.

Fault	Cause	Remedy
Pump is not running. No power supply	• System is switched off.	Check the system controller.
	• A fuse in the installation is blown.	Replace the fuse.
	• The circuit breaker has tripped.	Check the power connection and switch on the circuit breaker.
	• Power supply failure.	Check the power supply.
Pump is not running. Normal power supply.	• Controller is switched off.	Check the controller and its settings.
	• Pump is blocked by impurities.	Remove impurities. Deblock the pump from the front of the control box with a screwdriver
	• Pump is defective.	Replace the pump.
Noise in the system.	• Air in the system.	Vent the system.
	• Differential pressure is too high.	Reduce the pump performance at the pump.
Noise in the pump.	• Air in the pump.	Let the pump run. The pump vents itself over time.
	• Inlet pressure is too low.	Increase the system pressure or check the air volume in the expansion tank.
Insufficient flow.	• Pump performance is too low.	Check the external controller and the pump settings.
Pump runs at maximum speed and cannot be controlled	• No signal from signal cable.	Check if the cable is connected to the controller. If it is, replace the cable.
Pump LED5 is on. Pump tries to restart every 1.5 sec.	• Rotor shaft is blocked	Deblock the rotor shaft by pushing it with a screwdriver from the front of the pump.
Pump LED4 is on.	• Pump is running.	Check the supply voltage.
Pump LED3 is on. Pump stops.	• Supply voltage is too low. • Serious failure.	• Check the supply voltage. • Exchange the pump.

7 Electrical connections

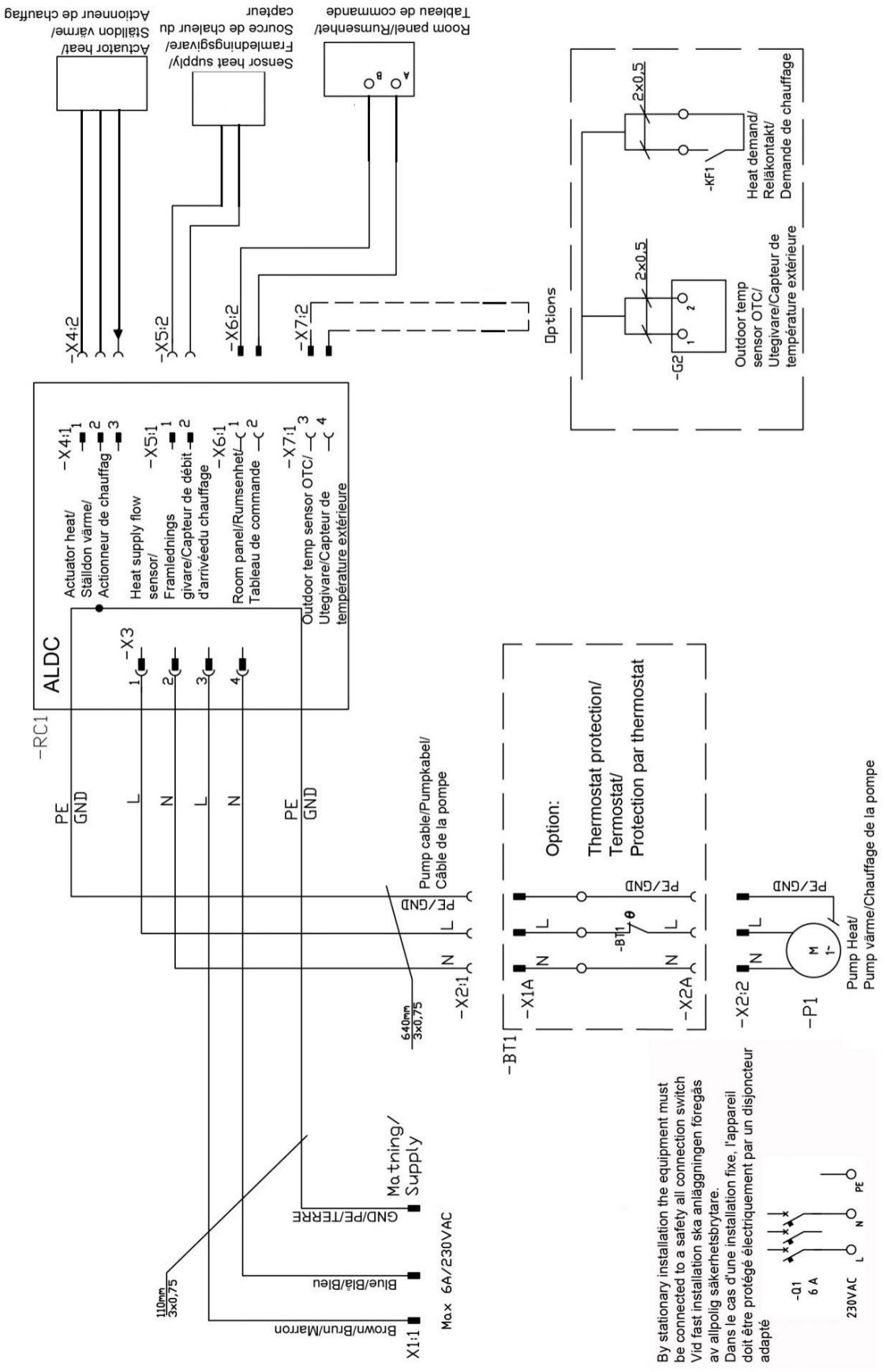

8 Schematic diagram, main components

8.1 Mini ECO F1

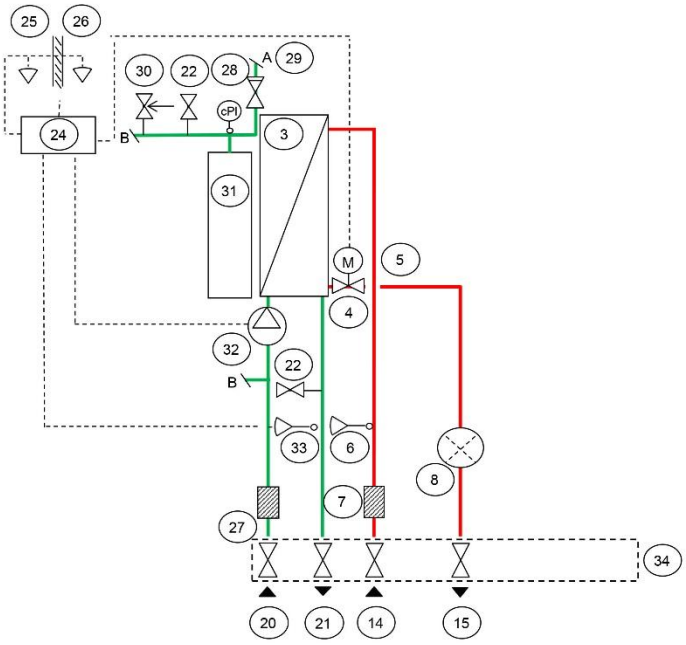

8.2 Mini ECO F2

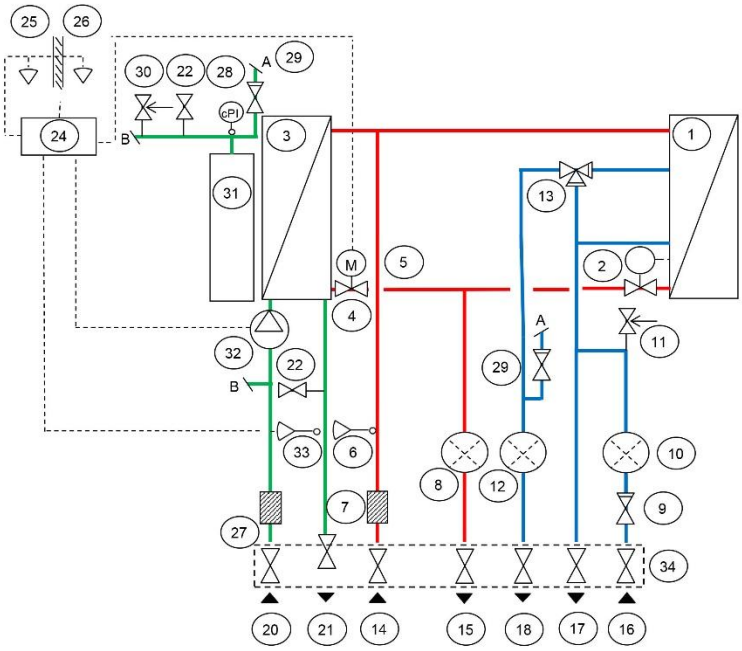

8.3 Mini ECO F3

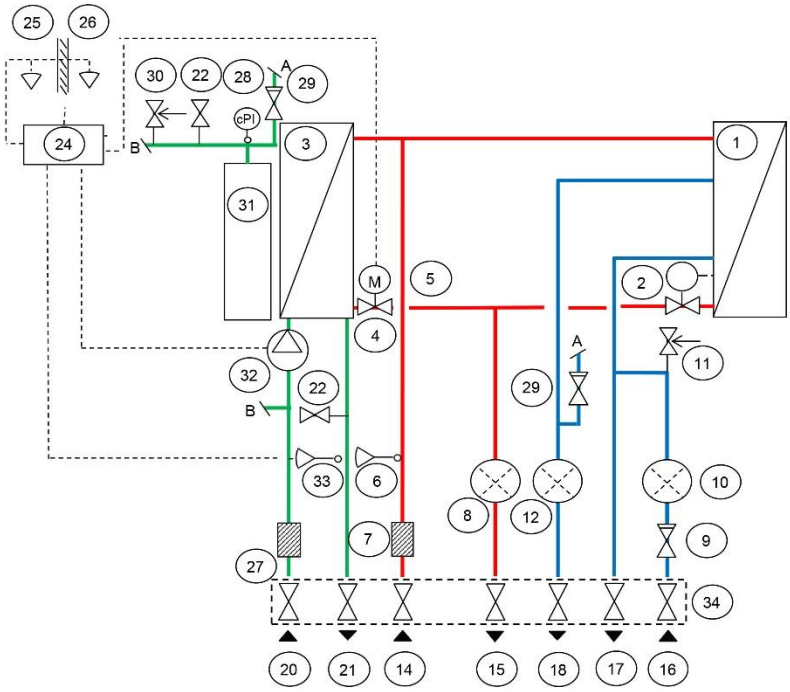

8.4 Mini ECO F4

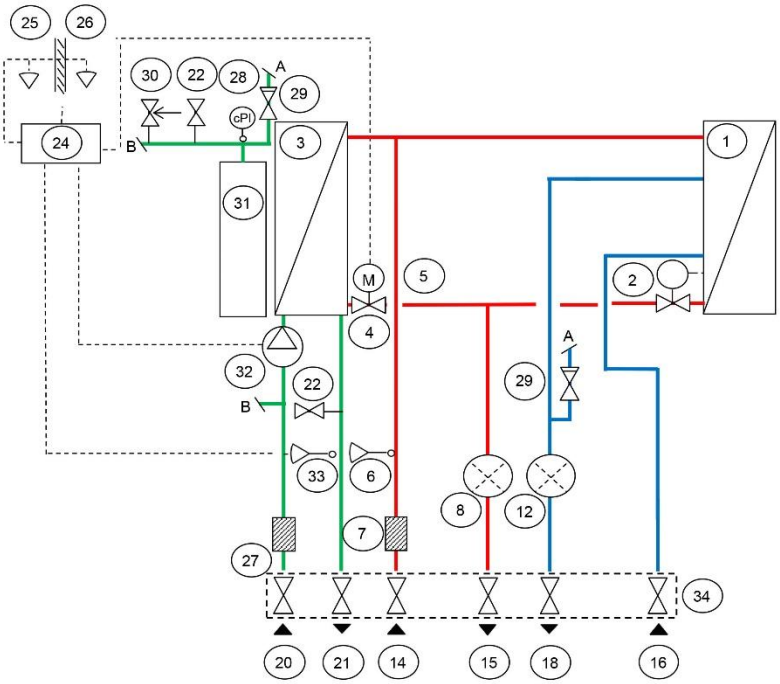

8.5 Mini ECO F5

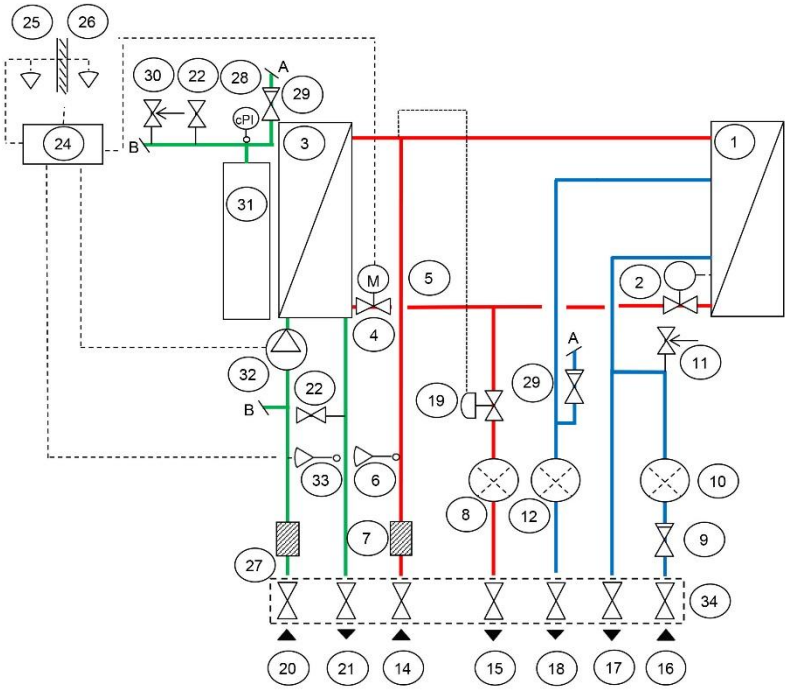

8.6 Mini ECO F7

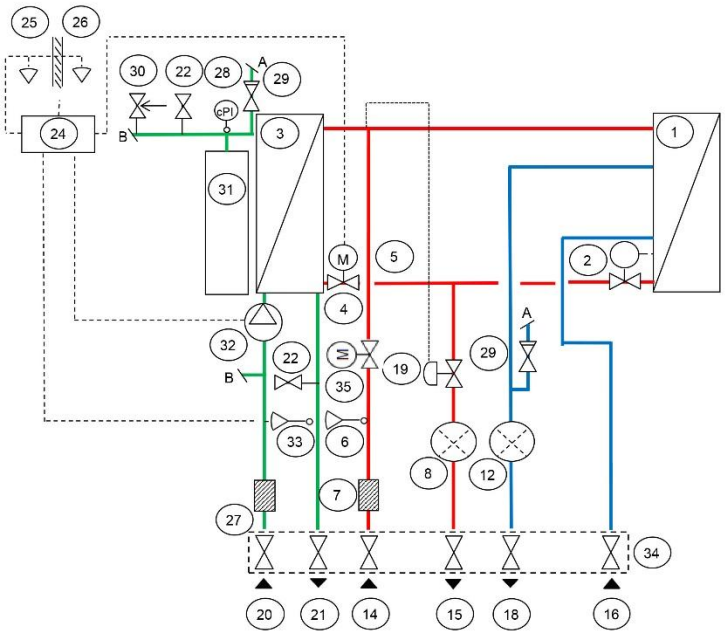

9 Service instructions

⚠	To avoid the risk of scalding, make sure that no-one draws any water while servicing the HIU.
⚠	Grey marked service actions must be carried out by an authorized service technician.

NOTE! Make sure that the HIU has been correctly installed.

9.1 Tap water service instructions

9.1.1 Tap water temperature too low

Reason	Action
Primary heating supply too low	**Check the primary inlet temperature** The temperature can be checked by means of the energy meter (min 65 º C) or contact the primary heating medium provider.
Handle on control valve incorrectly positioned	**Adjust the handle on the control valve** Control the hot water temperature by turning the handle on the control valve, counter clockwise to increase and clockwise to decrease tap water temperature. Adjust the hot water temperature by having a hot water tap open at normal flow rate. Measure the temperature at the draw-off point with a thermometer. It takes about 20 seconds to get a stable tap water temperature. The temperature should be minimum 50 °C. Cetetherm recommends that the primary inlet temperature is at least 10 ºC higher than the tap water temperature. NOTE: Make sure that no cold water is mixed with the hot water while making this adjustment. Seal the hot water actuator after setting.
Filter for heating media clogged	**See** 11.1 *Cleaning the heating media filter.*
Hot water valve does not work	**See** 10.1 *Check the function of the valve for hot water.*

9.1.2 Tap water temperature too high

Reason	Action
Handle on control valve incorrectly positioned	**Adjust the handle on the control valve** Control the hot water temperature by turning the handle on the control valve, counter clockwise to increas and clockwise to decrease tap water temperature. Adjust the hot water temperature by having a hot water tap open at normal flow rate. Measure the temperature at the draw-off point with a thermometer. It takes about 20 seconds to get a stable tap water temperature. The temperature should be minimum 50 °C. Cetetherm recommends that the primary inlet temperature is at least 10º higher than the tap water temperature. **NOTE**: Make sure that no cold water is mixed with the hot water while making this adjustment. Seal the hot water actuator after setting.
Hot water valve and/or actuator does not work	**See** *10.1 Check the function of the valve for hot water* If the water temperature is too high when the handle is in position 0, the actuator or the exchanger is damaged and requires replacing.

9.1.3 Hot water temperature unstable or too low

Reason	Action
Alternating pressure on primary side	**Check available differential pressure and temperature at the primary heating medium provider**
Filter for heating media clogged	**See** 11.1 *Cleaning the heating media filter*.
Check valve DHWC defect	**Check and change if necessary** **See** *11.10 Change the DHWC check valve*.

9.2 Heating system service instructions

9.2.1 Heating system temperature too high or too low

Reason	Action
The heating control equipment may need to be adjusted	**Check and adjust the heating curve** If needed the set heating curve can be fine-tuned. Increase/ decrease the room temperature by parallel adjust the heating curve. **Control panel Round** **See** *5.3 Changing control mode, OTC heating curve and max supply temperature*.
Heating supply temperature sensor and outdoor temperature sensor does not work	**Check that the heating supply temperature sensor and outdoor temperature sensor are correctly sited and working.** **Control panel Round:** Supply temperature can only be viewed in control mode 4 and 5.
The pressure in the system is to low or there is not enough water in the heating system	**Check the pressure on the manometer and top up the system with water** The pressure should not be below 1.0 Bar in winter time or below 0.6 Bar in summer. The circuit should only be topped up with fresh water when necessary. The water used for topping up contains oxygen which can lead to corrosion in the system. The circuit should therefore be topped up as seldom as possible. Fill up by opening the top up valves until the pressure meter shows desired value, or up to maximum 2.0 Bar. Then close the top up valve. The safety valve opening pressure is 2.5 Bar.
Air in the heating system	**Bleed the system** Disconnect the HIU power supply cable. Bleed the heating system via the air vent valve. The pump is self-venting. Air in the pump may cause noise. This noise ceases after a few minutes run time. Bleed the radiators. 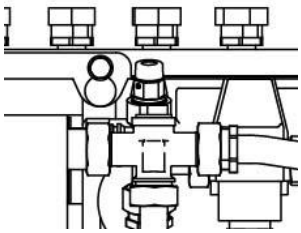
Heating valve and/or actuator does not work	**See** *10.2 Check the function of the heating actuator and valve*.
Filter for heating media clogged	See *11.1 Cleaning the heating media filter*.
Differential pressure control valve incorrectly adjusted (option)	**See** *13.1 Differential pressure control valve, DPC*

9.2.2 No heating

Reason	Action
Closed radiator or floor heating valves	**Check that all radiator valves and floor heating valves are fully open**
Circulation pump not running	**Check that the electrical power is on**
	Check the circulation pump If the pump fails to start after stopping, try to start it at the highest setting. See *6.3 Changing the control mode*.
Heating supply temperature sensor and outdoor temperature sensor does not work	**Check that the heating supply temperature sensor and outdoor temperature sensor are correctly sited and working.** **Control panel Round:** Supply temperature can only be viewed in control mode 4 and 5.
The pressure in the system is to low or there is not enough water in the heating system	**Check the pressure on the manometer and top up the system with water** The pressure should not be below 1.0 Bar in winter time or below 0.6 Bar in summer. The circuit should only be topped up with fresh water when necessary. The water used for topping up contains oxygen which can lead to corrosion in the system. The circuit should therefore be topped up as seldom as possible. Fill up by opening the top up valves until the pressure meter shows desired value, or up to maximum 2.0 Bar. Then close the top up valve. The safety valve opening pressure is 2.5 Bar.
Air in the heating system	**Bleed the system** Disconnect the HIU power supply cable. Bleed the heating system via the air vent valve. The pump is self-venting. Air in the pump may cause noise. This noise ceases after a few minutes run time. Bleed the radiators. 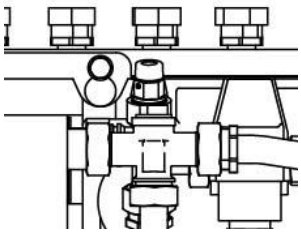
Filter for heating media clogged	**See** *11.1 Cleaning the heating media filter*.
Differential pressure control valve incorrectly adjusted(option)	**See** *13.1 Differential pressure control valve, DPC*

9.2.3 Heating temperature unstable

Reason	Action
Alternating pressure on primary side	**Check available differential pressure and temperature at the primary heating medium provider**
Heating supply temperature sensor and outdoor temperature sensor does not work	**Check that the heating supply temperature sensor and outdoor temperature sensor are correctly sited and working.** **Control panel Round:** Supply temperature can only be viewed in control mode 4 and 5.
Filter for heating media clogged	**See** *11.1 Cleaning the heating media filter.*
Differential pressure control valve incorrectly adjusted (option)	**See** *13.1 Differential pressure control valve, DPC*

9.2.4 Disturbing noise from the circulation pump or the radiator system

Reason	Action
Air in the system	**Bleed the system** Disconnect the HIU power supply cable. Bleed the heating system via the air vent valve. The pump is self-venting. Air in the pump may cause noise. This noise ceases after a few minutes run time. Bleed the radiators. 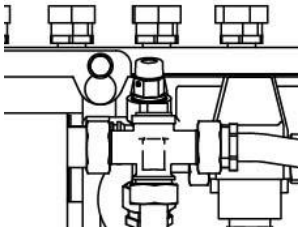
Air in the pump	**Let the pump run** The pump vents itself over time. Air in the pump may cause noise. This noise ceases after a few minutes run time.
Pump runs with incorrect operating mode	**Check and change to recommended operating mode** **See** *6.3 Changing the control mode*.
Pump motor or pump component damaged	**See** *11.3 Change pump components or the complete pump*.
Differential pressure control valve set too high	**See** *13.1 Differential pressure control valve, DPC*.

9.2.5 Heating system often needs topping up

Reason	Action
Leaks in the HIU or in the system	**Check the HIU and the system for leaks** Leaks from the HIU or the heating system cause pressure drop. Contact your service technician if finding any leaks.
The expansion vessel cannot handle the changes in the system	**See** *10.3 Check the volume take-up and pressure equalizing of the expansion vessel*.
The heating system safety valve is leaking or does not work	**Check the heating system safety valve** Check that the heating system safety valve is not leaking and that it works properly. Check the safety valves' function by turning the red wheel/knob until water runs out of the valve's waste pipe and then close the valve quickly.

10 Service actions for the installer

10.1 Check the function of the valve for hot water

⚠	Service actions must be carried out by an authorized service technician.
⚠	Close the shutoff valves for the **Heating network supply** and **Heating network return** together with the **cold** and **hot wate**r.
⚠	After finishing repair, open the shutoff valves. Start with **Heating network supply** and then the **return** line, to avoid pollution in the system. Open the valves slowly to avoid pressure surges.

- Disconnect the power feed to the HIU.
- Close the shut-off valves.
- Unscrew the tap water actuator from the control valve. If the valve is working it should be fully open when the actuator is removed.
  Check that hot water passes through the valve. Feel gently on a pipe after the valve.

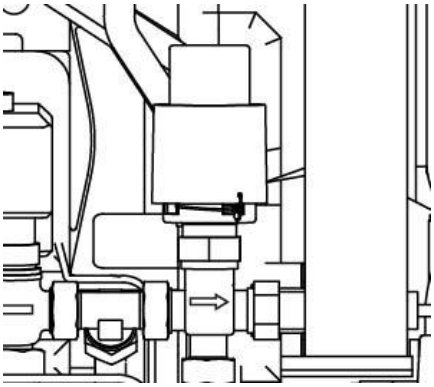

- Carefully press the valve's spindle with a tool and check the valve's travel and spring back.
  NOTE: The valve may be very hot!
- Turn the handle on the actuator; a small dip should move in and out. If the dip does not move the actuator is damaged and requires replacing.
- Connect the power feed to the HIU.
- Open the shutoff valves.

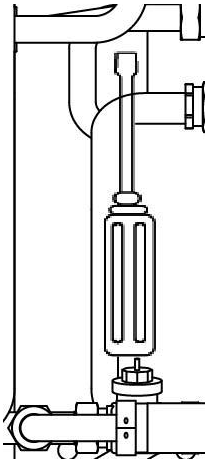

10.2 Check the function of the heating actuator and valve

⚠	Service actions must be carried out by an authorized service technician.
⚠	The room thermostat must be without current when manoeuvring the actuator by hand.

Check the actuator by pulling out the electrical cable and refit it again; this will start an automatic self-test off the actuator.
See *4.14 Starting up sequence for Mini ECO with component check.*

Check the flow using the energy meter while test-running the valve.
If no energy meter is available, disconnect the heating actuator from the valve. Close the actuator by turning the knob clockwise, this will make it easier to reattach

If the valve is working it should be fully open when the actuator is removed.
Carefully depress the valve's spindle with a tool and check the valve's travel and spring back.

Note! The valve may be very hot

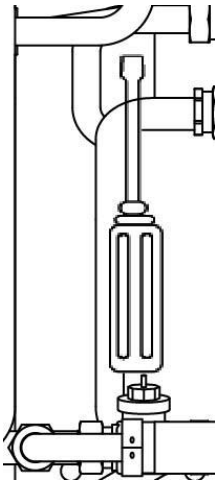

10.3 Check the volume take-up and pressure equalizing of the expansion vessel

Check the expansion vessel for possible leakage.
The cause may be that the expansion vessel cannot manage the volume changes on the heating side. The expansion vessel may have to be replaced.
See *11.11 Change the expansion vessel*.

Alternatively, the system´s total volume of water may be too high, i.e. the volume changes are too large for the expansion vessel. If so, add extra expansion volume.

11 Maintenance and repairs

When carrying out repairs, please contact your local service partner.

⚠	Before starting out repairs always close the correct shutoff valves.
⚠	When dismounting a component there will be water coming out, hot and under pressure.

11.1 Cleaning the heating media filter

⚠	Service actions must be carried out by an authorized service technician.
⚠	The temperature and the pressure of the district heating water are very high. Only qualified technicians can work with the district heating HIU. Incorrect operation may cause serious personal injury and result in damage to the building.
⚠	Before starting out repairs close the **heating network supply** and **heating network return** shutoff valves.
⚠	After finishing repair, open the shutoff valves. Start with **heating network supply** and then the **return** line, to avoid pollution in the system. Open the valves slowly to avoid pressure surges.

- Disconnect the power feed to the HIU.
- Close the shut-off valves.
- Use a wrench and release the filter cover and remove the cartridge.
- Clean the filter with water and refit the cartridge. Screw the filter cover with a momentum of 10–20 Nm.
- Open the shutoff valves and connect the power feed to the HIU.

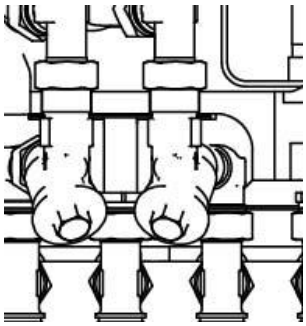

11.2 Cleaning the heating circuit filter

⚠	Service actions must be carried out by an authorized service technician.
⚠	Before starting out repairs, close the shutoff valves **heating network supply**, **heating network return**, **heating supply and heating return**. Release the pressure using the heating circuit safety valve.
⚠	After finishing repairs, fill up the circuit and vent. Open the shutoff valves, start with **heating network supply** and then the **return** line, to avoid pollution in the system. Then open **heat return** and then **supply**. Open the valves slowly to avoid pressure surges.

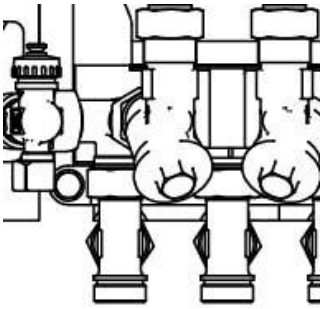

- Disconnect the power feed to the HIU.
- Close the shut-off valves.
- Use a wrench and release the filter cover and remove the cartridge.
- Clean the filter with water and refit the cartridge. Screw the filter cover with a momentum of 10–20 Nm.
- Fill up the heating circuit using the toping up valve, vent the heating circuit.
- After final bleeding, the pressure should not be less than 1.0 bar in winter and not less than 0.6 bar in summer.
- Open the shutoff valves and connect the power feed to the HIU.

11.3 Change pump components or the complete pump

⚠	Maintenance and repairs must be carried out by an authorized service technician.
⚠	Before starting out repairs, close the shutoff valves **heating network supply**, **heating network return**, **heating supply** and **heating return**. Release the pressure using the heating safety valve.
⚠	After finishing repair; fill up the heating circuit and vent. Open the shutoff valves, start with **heating return** and then **heating supply**, then **heating network Supply** and **heating network return**, to avoid pollutions in the system. Open the valves slowly to avoid pressure surges.

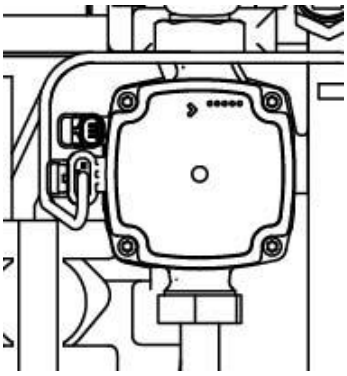

- Disconnect the power feed to the HIU, disconnect the power cable to the pump.
- Close the shut-off valves.
- Rlease the brass nuts with a spanner and replace the pump. Connect the pump cable.
- Fill up the heating circuit using the top up valves. Vent the heating circuit.
- Open the shut-off valves and connect the power feed to the HIU.
- After final bleeding, the pressure should not be less than 1.0 bar in winter and not less than 0.6 bar in summer.

11.4 Change the hot water actuator and heat exchanger

⚠	The temperature and the pressure of the district heating water are very high. Only qualified technicians can work with the district heating HIU. Incorrect operation may cause serious personal injury and result in damage to the building.
⚠	Before starting out repairs close the **heating network supply** and **heating network return** shutoff valves.
⚠	After finishing repair, open the shutoff valves. Start with **heating network supply** and then the **return** line, to avoid pollution in the system. Open the valves slowly to avoid pressure surges.

- Disconnect the power feed to the HIU.
- Close the shut-off valves.
- Unscrew the actuator from the control valve.
- Release the four nuts on the heat exchanger.
- Refit a new heat exchanger and actuator.
  Use new gaskets and tighten with 45Nm.
- Mount the actuator on the valve.
- Open the shutoff valves and connect the power feed to the HIU.

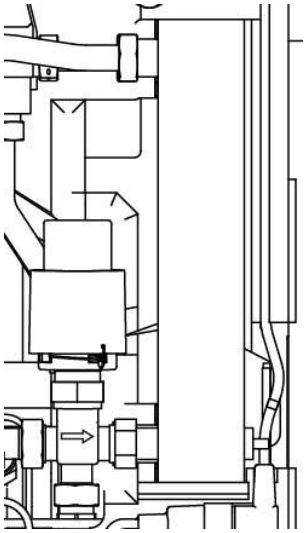

11.5 Change the hot water valve

⚠	The temperature and the pressure of the district heating water are very high. Only qualified technicians can work with the district heating HIU. Incorrect operation may cause serious personal injury and result in damage to the building.
⚠	Before starting out repairs close the **heating network supply** and **heating network return** shutoff valves.
⚠	After finishing repair, open the shutoff valves. Start with **heating network supply** and then the **return** line, to avoid pollution in the system. Open the valves slowly to avoid pressure surges.

- Disconnect the power feed to the HIU.
- Close the shut-off valves.
- Unscrew the tap water actuator from the control valve.
- Use a spanner to remove the control valve.
  Note the arrow direction on the valve.
- Mount a new valve; and take especially care to the arrow direction.
  Use new gaskets and tighten with 45Nm.
- Fasten the tap water actuator on the valve.
- Open the shutoff valves and connect the power feed to the HIU.

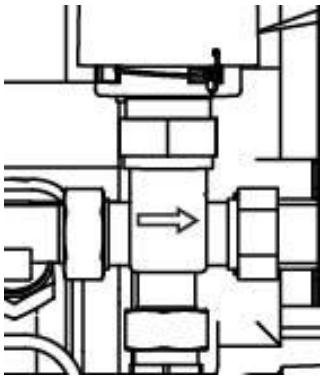

11.6 Change the heating actuator

⚠	Maintenance and repairs must be carried out by an authorized service technician.

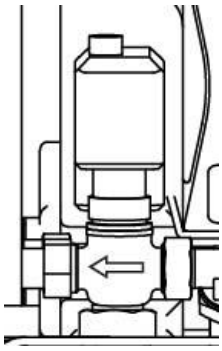

- Disconnect the electrical power supply.
- Disconnect the cable from heating actuator in the connection box.
- Unscrew the heating actuator from the valve, the valve closes.
- Cut off all straps that holds the actuator cable.
- Make sure that new actuator is closed by turning the knob clockwise to the closing position. Fasten the actuator, use only hand power.
- Replace cable and straps.
- Connect the power feed to the HIU.
- Check the function of the actuator during start up.

11.7 Change the heating valve

⚠	Maintenance and repairs must be carried out by an authorized service technician.
⚠	The temperature and the pressure of the district heating water are very high. Only qualified technicians can work with the district heating HIU. Incorrect operation may cause serious personal injury and result in damage to the building.
⚠	Before starting out repairs close the **heating network supply** and **heating network return** shutoff valves.
⚠	After finishing repair, open the shutoff valves. Start with **heating network supply** and then the **return** line, to avoid pollution in the system. Open the valves slowly to avoid pressure surges.

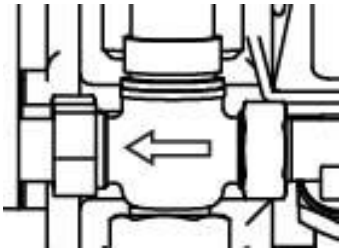

- Disconnect the power feed to the HIU.
- Close the shut-off valves.
- Unscrew the heating actuator from the control valve.
- Use a wrench to remove the control valve.
  Note the arrow direction on the valve.
- Mount a new valve; and take especially care to the arrow direction.
  Use new gaskets and tighten with 45Nm.
- Close the actuator by turning the knob clockwise to the closing position. Fasten the actuator, use only hand power.
- Open the shutoff valves and connect the power feed to the HIU.

11.8 Change the heating circuit supply temperature sensor

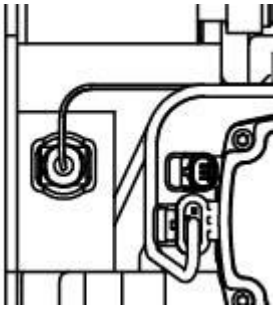

- Disconnect the power feed to the HIU.
- Close the heating actuator by turning the knob clockwise to its closing position.
- Disconnect the quick-connect terminals and replace the sensor with a new one.
- Connect the power feed to the HIU.
- Check the sensors value on the control panel after 5 min.

11.9 Change the outdoor temperature sensor

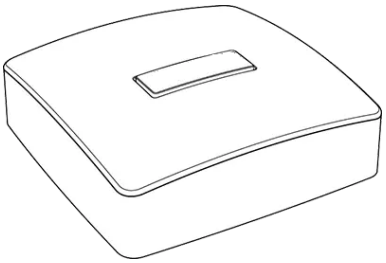

- Disconnect the power feed to the HIU.
- Close the heating actuator by turning the knob clockwise to its closing position.
- Unscrew the lid of the outdoor temperature sensor by turning it counter-clockwise.
- Unscrew the cables and loosen the cable fitting.
- Install a new outdoor temperature sensor.
- Connect the power feed to the HIU.
- Check the sensors value on the control panel after 5 min.

11.10 Change the DHWC check valve

⚠	Maintenance and repairs must be carried out by an authorized service technician.
⚠	Before starting out repairs, close the shutoff valves **heating network supply**, **heating network return**, **cold-water** and **hot water**. Release the pressure using the DHWC safety valve.
⚠	After finishing repair, fill up the hot water circuit and vent. Open the shutoff valves, start with **heating network Supply** and then **heating network return,** to avoid pollution in the system. Open the valves slowly to avoid pressure surges.

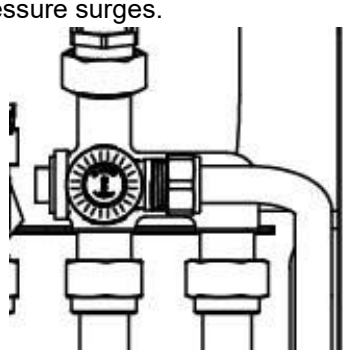

- Disconnect the power feed to the HIU.
- Close the shut-off valves.
- Use a wrench and unscrew the pipe between the cold water flow meter and safety valve hot water.
- Remove the old check valve and mount a new.
  NOTE! Make sure that the check valve is mounted in the correct way.

Flow direction

- Mount the pipe again.
- Open the shutoff valves cold and hot water.
- Vent the circuit by opening a hot water tap.
- Connect the power feed to the HIU. Open the shutoff valves heating network Supply and then heating network return.

11.11 Change the expansion vessel

⚠	Maintenance and repairs must be carried out by an authorized service technician.
⚠	Before starting out repairs, close the shutoff valves **heating network supply**, **heating network return**, **heating supply and heating return**. Release the pressure using the heating circuit safety valve.
⚠	After finishing repairs, fill up the circuit and vent. Then open the shutoff valves, start with **heating network supply** and then the **return** line, to avoid pollution in the system. Then open **heat return** and then **supply**. Open the valves slowly to avoid pressure surges.

1. Disconnect the power feed to the HIU.
2. Close the shut-off valves.
3. Replace the expansion vessel.
4. Fill up the heating circuit using the toping up valve, vent the heating circuit.
5. Open the shutoff valves and connect the power feed to the HIU.
6. After final bleeding, the pressure should not be less than 1.0 bar in winter and not less than 0.6 bar in summer.

11.12 Change the differential pressure control valve

⚠	Maintenance and repairs must be carried out by an authorized service technician.
⚠	The temperature and the pressure of the district heating water are very high. Only qualified technicians can work with the district heating HIU. Incorrect operation may cause serious personal injury and result in damage to the building
⚠	Before starting out repairs close the heating network supply and heating network return shutoff valves
⚠	After finishing repair; open the shutoff valves. Start with heating network supply and then the return line, to avoid pollutions in the system. Open the valves slowly to avoid pressure surges.

- Disconnect the power feed to the HIU.
- Close the shut-off valves.
- Use a spanner to remove the differential pressure control valve.
  Note the position of the P/T plugs on the valve.
- Mount a new valve; and take especially care to the P/T plugs position.
  Use new gaskets and tighten with 45Nm.
- Open the shutoff valves and connect the power feed to the HIU.

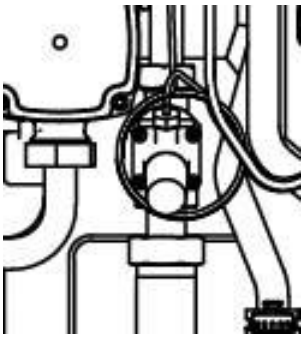

12 Operating data and performance

Primary side:	Primary side	Heating	DHW
Design pressure PS	16 Bar	10 bar	10 Bar
Design temperature TS	120°C	90°C	90°C
Relief pressure safety-valve UK		3 Bar	6 Bar
Relief pressure safety-valve (not UK)	-	2,5 Bar	9 Bar
Volume Heat exchanger, L	0,38/0,45	0,46 L	0,48 L

Temperature program (°C) Heating	Capacity kW	CB type	Plates no	Plates primary	Plates secondary	Flow P l/s	dPp kPa	Flow S l/s	dPs kPa
100-63/60-80	14	18	15*	1*7AH	1*7AL	0,09	5	0,17	6
100-48/45-60(46,2)	16	18	15*	1*7AH	1*7AL	0,07	3	0,26	**14**
100-43/40-60(42,6)	22	18	15*	1*7AH	1*7AL	0,09	5	0,26	**15**
100-33/30-35 (30,2)	6	18	15*	1*7AH	1*7AL	0,02	1	0,29	**18**
85-47/45-60	14	18	15*	1*7AH	1*7AL	0,09	5	0,22	11
80-63/60-70 (62,5)	11	18	15*	1*7AH	1*7AL	0,15	13	0,26	**15**
80-60/50-70(57,5)	17	18	15*	1*7AH	1*7AL	**0,18**	19	0,20	9
80-33/30-35(30,2)	6	18	15*	1*7AH	1*7AL	0,03	1	0,29	**18**
100-63/60-80	24	18	23	1*11AH	1*11AL	0,15	6	0,29	8
100-48/45-60(45,8)	21	18	23	1*11AH	1*11AL	0,09	2	**0,34**	11
100-43/40-60(41,7)	27	18	23	1*11AH	1*11AL	0,11	3	**0,32**	10
100-33/30-35 (30,2)	6,5	18	23	1*11AH	1*11AL	0,02	1	**0,31**	10
85-47/45-60 (46,5)	19	18	23	1*11AH	1*11AL	0,12	4	**0,30**	9
80-63/60-70 (61,7)	13	18	23	1*11AH	1*11AL	0,17	7	**0,31**	9
80-60/50-70(56,0)	22	18	23	1*11AH	1*11AL	**0,22**	12	0,26	7
80-33/30-35(30,2)	6,5	18	23	1*11AH	1*11AL	0,03	1	**0,31**	10

Temperature program (°C) DHW	Capacity kW	CB type	Plates no	Plates primary	Plates secondary	Flow P l/s	dPp kPa	Flow S l/s	dPs kPa
80-25/10-60	62	20	27*	1*12 H	1*13 H	0,27	17	0,3	17,5
80-23/10-55(22,7)	67	20	27*	1*12 H	1*13 H	0,28	18	0,35	24,7
65-22/10-50	43	20	27*	1*12 H	1*13 H	0,24	13	0,26	14
65-25/10-50 (23,3)	50	20	27*	1*12 H	1*13 H	**0,29**	19	0,3	18
60-25/10-50	40	20	27*	1*12 H	1*13 H	0,27	17	0,24	12
80-25/10-60 (23,0)	69	20	35	1*16 H	1*17 H	**0,29**	11	0,33	13
80-25/10-55 (21,0)	75	20	35	1*16 H	1*17 H	**0,30**	12	0,4	19
65-25/10-50 (23,1)	67	20	35	1*16 H	1*17 H	**0,38**	19	0,4	19
65-22/10-50 (20,1)	50	20	35	1*16 H	1*17 H	**0,27**	10	0,3	11
60-25/10-50 (24,1)	50	20	35	1*16 H	1*17 H	**0,33**	15	0,3	11

Mini ECO 2018-01-25, WRAS 2021-03-23

* Option

12.1 Technical Data

Main measures	See Measure sketch
• With cover	560x240x850 (mm, WxDxH)
• Without cover	560x220x850 (mm, WxDxH)
Weight	26kg, cover 2kg
Electrical data	230 V, 1-phase, 50 W
Transportation	Total weight 32 kg, 0.2 m³
Sound level	<55 dB (A) 1.6 m from floor, 1 m from unit

12.2 Measure sketch

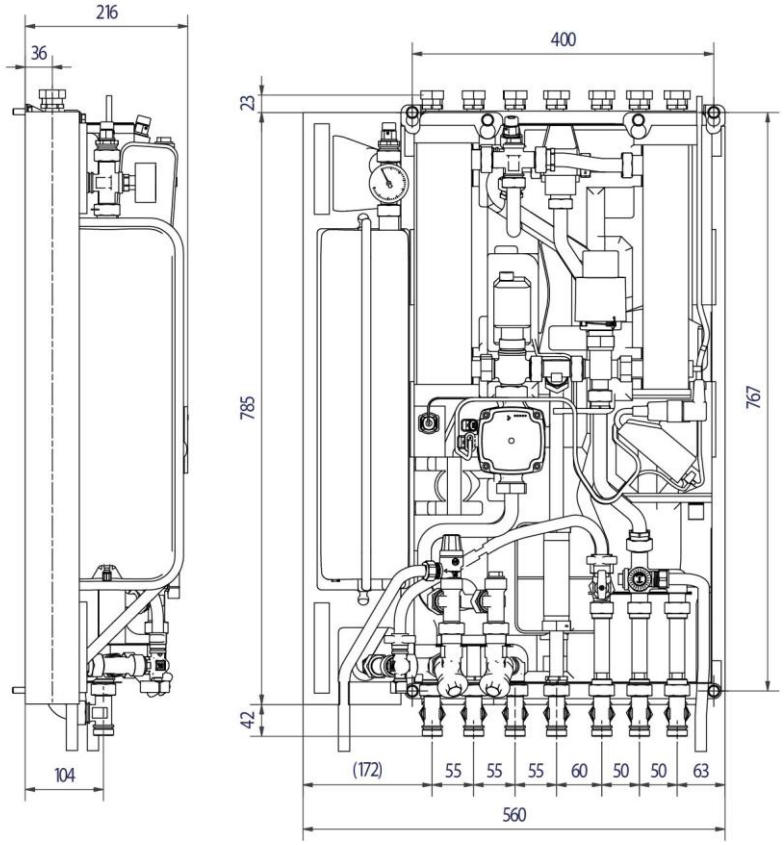

13 Options

The mounting instructions are described for a new installation. If the kits are to be installed on an already installed subsystem, release the water pressure and disconnect the electrical power supply before starting. The options must be installed by an authorized installation contractor.

13.1 Differential pressure control valve, DPC

Note: Differential pressure control is not available on all models.

Adjusting the DPC must be carried out by an authorized service technician.

13.1.1 Setting the DPC valve

Set the valve to the differential pressure 60 kPa.

Settings lower than 60 kPa will affect the functionality.

Start with the valve at minimum position and then open with 19 numbers of turns.
Use a 4mm hexagonal key.

NOTE: Always start from the minimum position of the valve, before making new settings.

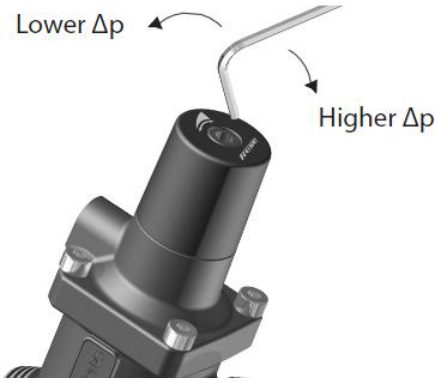

13.1.2 Flow rate graph of the DPC

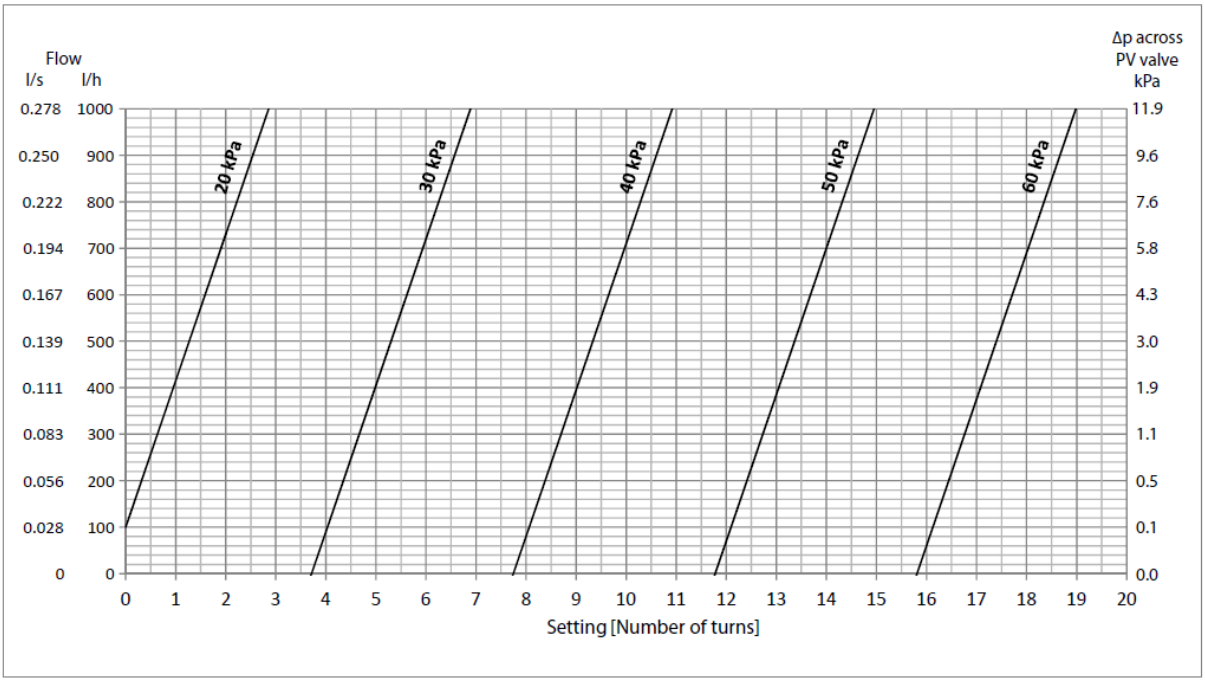

13.2 Safety thermostat

Heating system sensitive to high temperatures for example under floor heating must be equipped with a safety thermostat. If the heating system is not equipped with the thermostat, the under-floor heating system and floors in general might get damaged.

- Disconnect the HIU electrical power supply cable. Disconnect the electrical plug on the circulation pump.
- Connect the new power supply cable from the electrical box to the circulation pump.
- Reconnect the existing power supply cable to the connection on the electrical box.
- Attach all electrical wires with the necessary number of straps. It is important not to attach electrical wires on primary heating pipes and sharp edges.
- Change parameters and recommended settings before starting up the system with a safety thermostat

13.2.1 Parameters and recommended settings for under floor heating

The following changes must be done before starting up Mini ECO with a safety thermostat.

- Change the pump operating mode to constant pressure.
  See *6.3 Changing the control mode.*

Control panel Round:

- Change the supply temperature to maximum 45 °C.
  See 5.3 *Changing control mode, OTC heating curve and max supply temperature*.
- Change room thermostat heat curve to 5.
  See 5.3 *Changing control mode, OTC heating curve and max supply temperature*.

13.3 Valve kit with service bypass and binder points

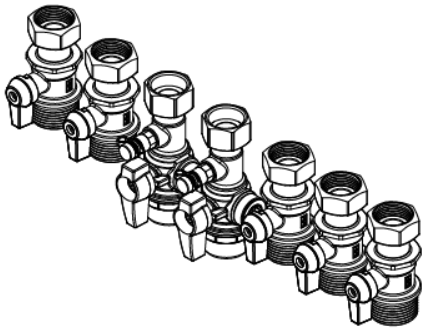

13.3.1 Using the valve kit with service bypass and binder points

The Service bypass makes it possible to flush the pipes *Heating Network media, supply and return*, when the HIU is mounted.

⚠	Maintenance and repairs must be carried out by an authorized service technician.
⚠	The temperature and the pressure of the district heating water are very high. Only qualified technicians can work with the district heating HIU. Incorrect operation may cause serious personal injury and result in damage to the building.
⚠	Before starting out repairs close the **heating network supply** and **heating network return** shutoff valves.
⚠	When opening the shutoff valves, start with **heating network Suppl**y and then **heating network return**, to avoid pollutions in the system. Open the valves slowly to avoid pressure surges.

- Connect the service bypass valves between connection *heating network media supply (**14**)* and *heating network media return (**15**)*.
  Tighten with 45 Nm.

- With the valves open, *heating network media supply* and *return* are connected to the HIU.

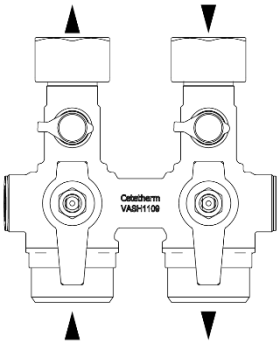

Open – handles in vertical position.

- With the valves in closed postion, *heating network media supply* and return are not connected to the HIU.

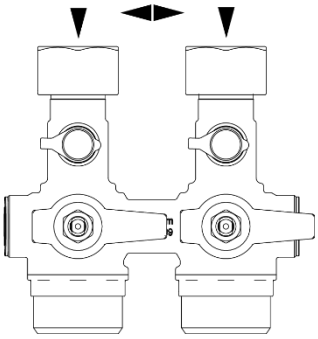

Closed – handles in horizontal position, pointing to the right.

- With the valves in bypass postion,the pipes for *heating network media supply* and *return*, are connected.

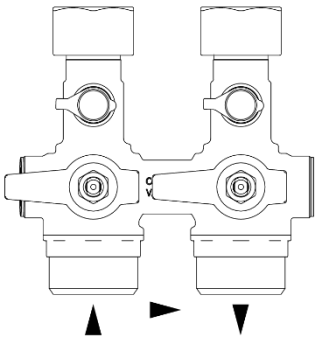

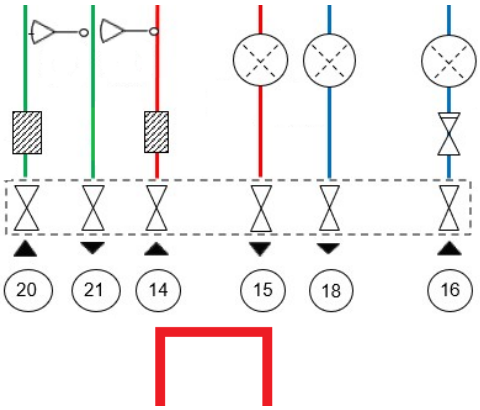

- After flushing the pipes, turn the handle to closed position and tighten the screws.
- Then open the shut off valves, start with *heating network supply* and then *heating network return*, to avoid pollutions in the system. Open the valves slowly to avoid pressure surges.

Cetetherm AB
Logistikvägen 9
372 38 Ronneby – Sweden
www.cetetherm.com

Cetetherm